SM-A315F

SAMSUNG CONFIDENTIAL
THIS DOCUMENT CONTAINS CONFIDENTIAL PROPRIETARY INFORMATION THAT IS SAMSUNG ELECTRONICS CO'S PROPERTY. DO NOT DISCLOSE TO OR DUPLICATE FOR OTHERS EXCEPT AS AUTHORIZED BY SAMSUNG.

	CIS/SWA/MEA	LATIN/SEA	KOR
FDD	1/ 2/ 3/ 5/ 7/ 8/ 20	1/2/3/4/5/7/8/12/13/17/20/28/66	1/ 3/ 5/ 7/ 8/ 17/ 20/ 28
TDD	38/ 40/ 41	38/ 40/ 41	38/ 40/ 41
3G	1/ 2/ 5/ 8	1/2/4/5/8	1/ 2/ 5/ 8
2G	850/900/1800/1900	850/900/1800/1900	850/900/1800/1900

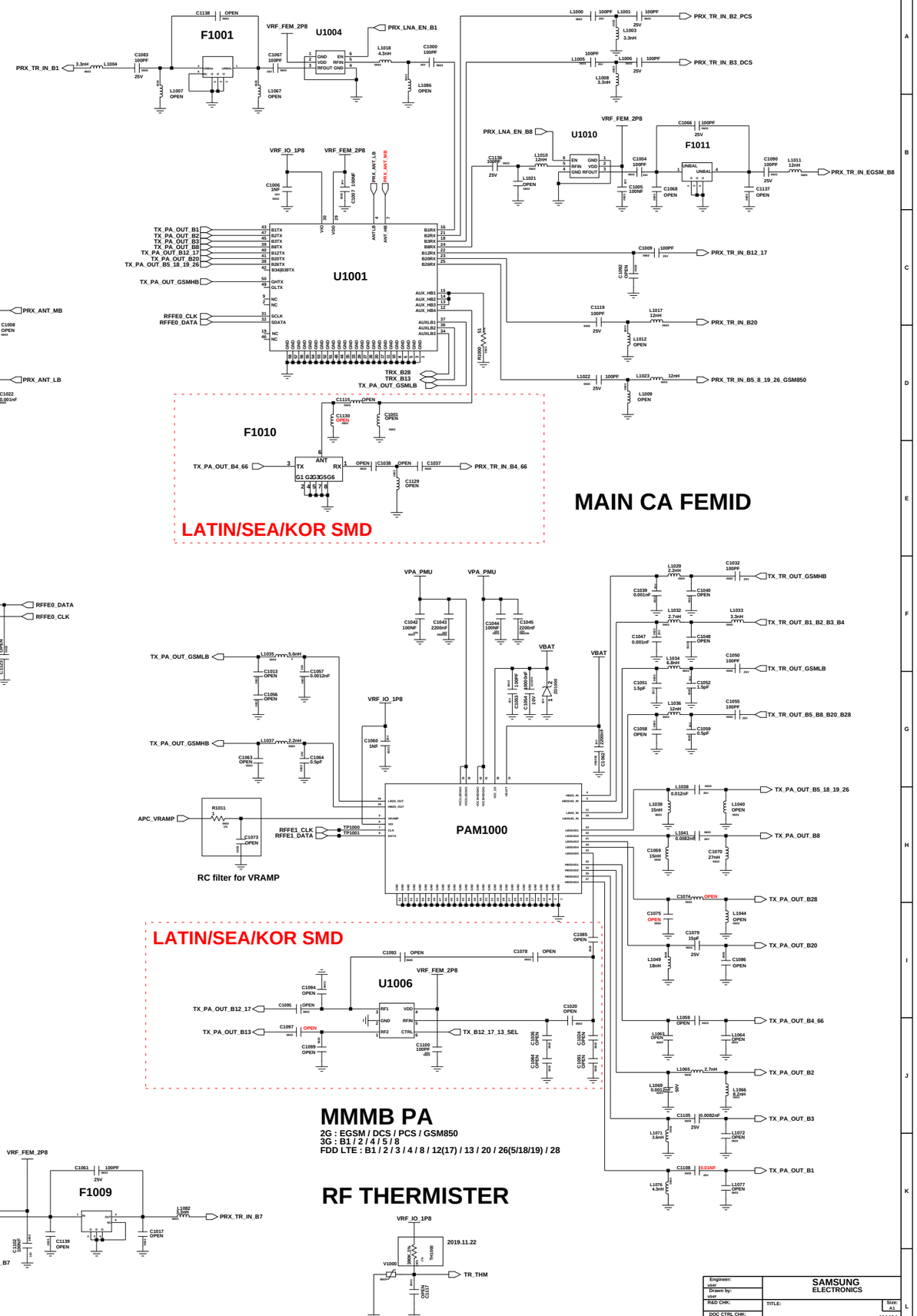

SAMSUNG CONFIDENTIAL
THIS DOCUMENT CONTAINS CONFIDENTIAL PROPRIETARY INFORMATION THAT IS SAMSUNG ELECTRONICS CO'S PROPERTY. DO NOT DISCLOSE TO OR DUPLICATE FOR OTHERS EXCEPT AS AUTHORIZED BY SAMSUNG.

	CIS/SWA/MEA	LATIN/SEA	KOR
FDD	1/ 2/ 3/ 5/ 7/ 8/ 20	1/2/3/4/5/7/8/12/13/17/20/28/66	1/ 3/ 5/ 7/ 8/ 17/ 20/ 28
TDD	38/ 40/ 41	38/ 40/ 41	38/ 40/ 41
3G	1/ 2/ 5/ 8	1/2/4/5/8	1/ 2/ 5/ 8
2G	850/900/1800/1900	850/900/1800/1900	850/900/1800/1900

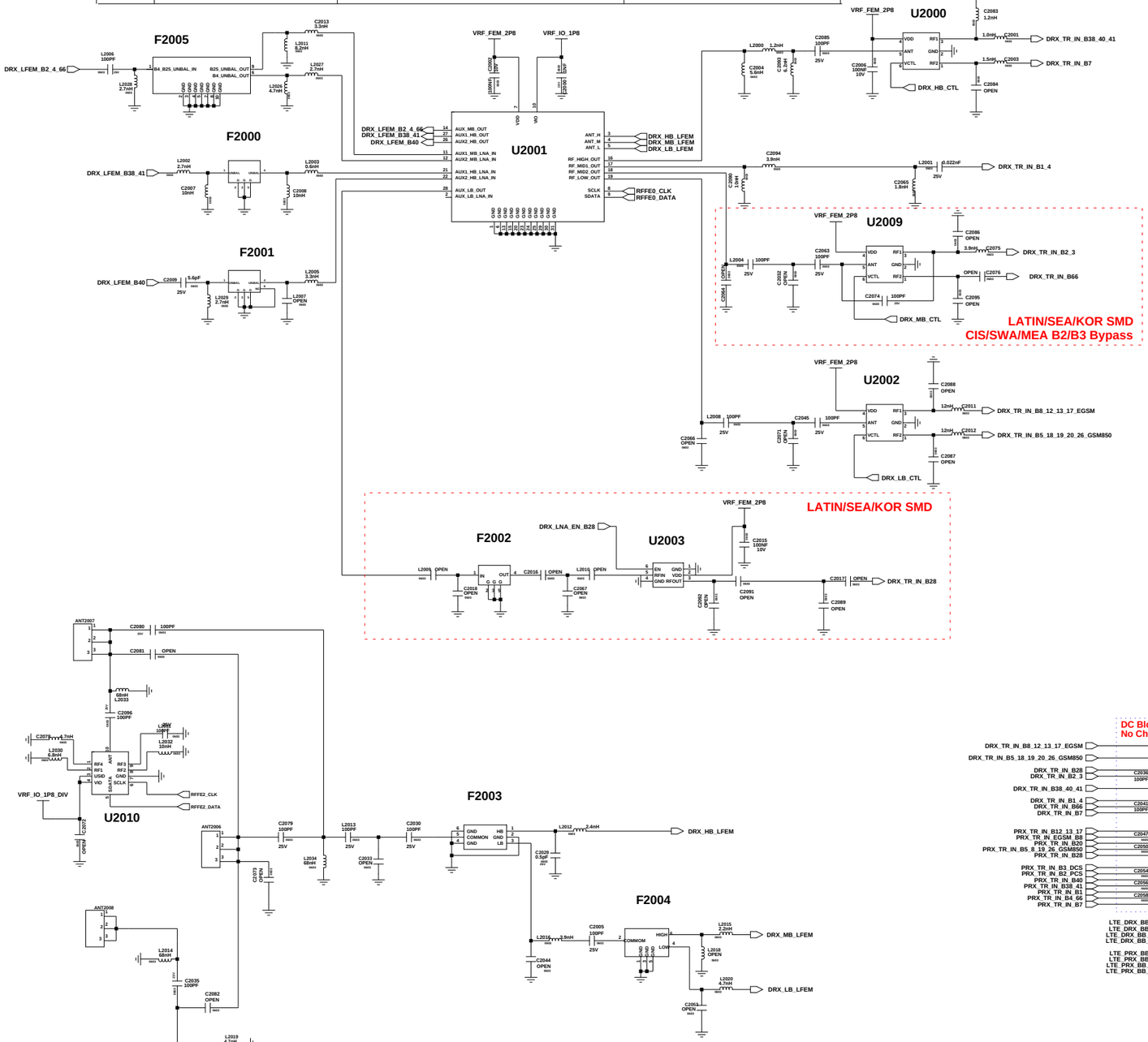

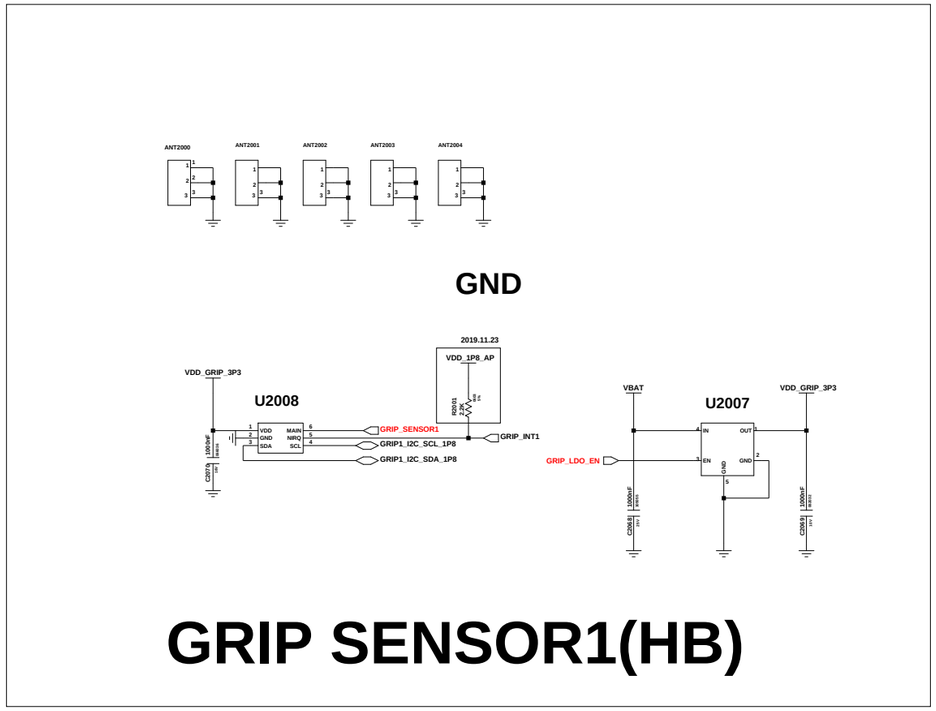

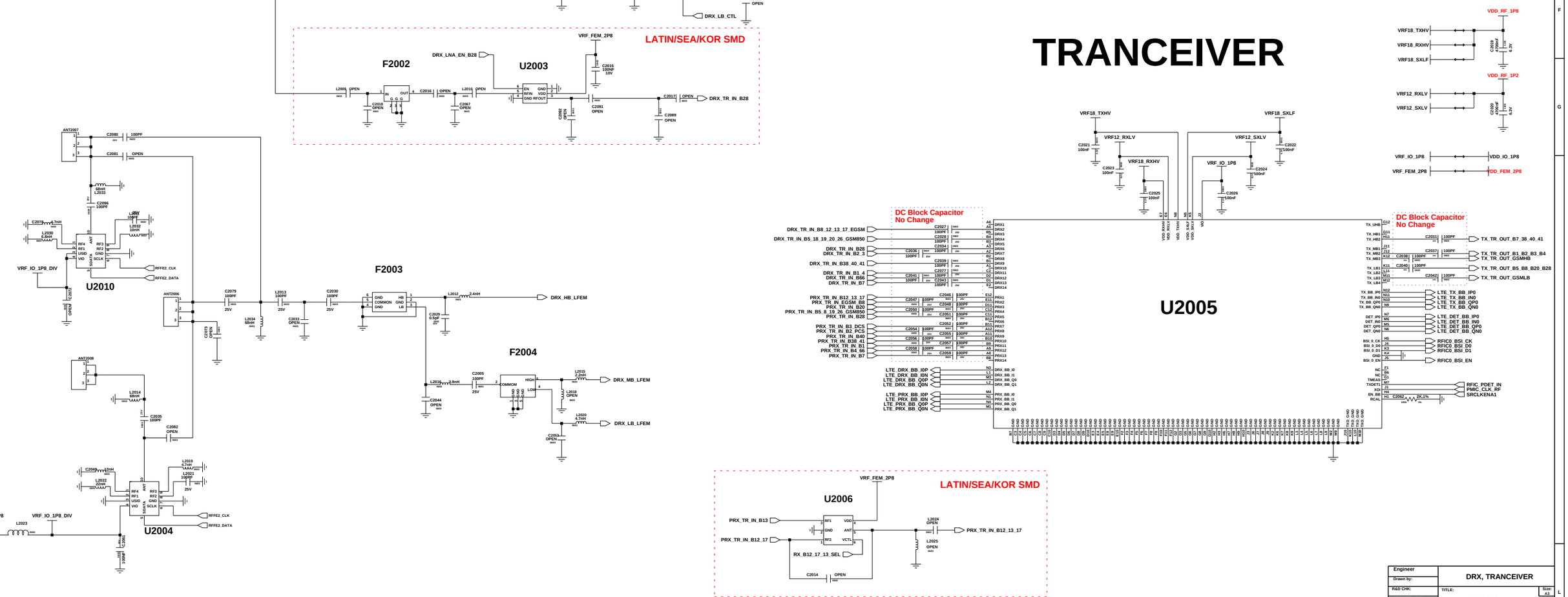

Engineer	
Drawn by:	
R&D CHK:	
DOC CTRL CHK:	
MFG ENGR CHK:	
QA CHK:	
TITLE:	DRX, TRANCEIVER
	SM-A315F
Size:	A3
Drawing Number	2/7

Changed by:	Date Changed:	Time Changed:

SAMSUNG CONFIDENTIAL
THIS DOCUMENT CONTAINS CONFIDENTIAL
PROPRIETARY INFORMATION THAT IS
SAMSUNG ELECTRONICS CO'S PROPERTY.
DO NOT DISCLOSE TO OR DUPLICATE FOR OTHERS
EXCEPT AS AUTHORIZED BY SAMSUNG.

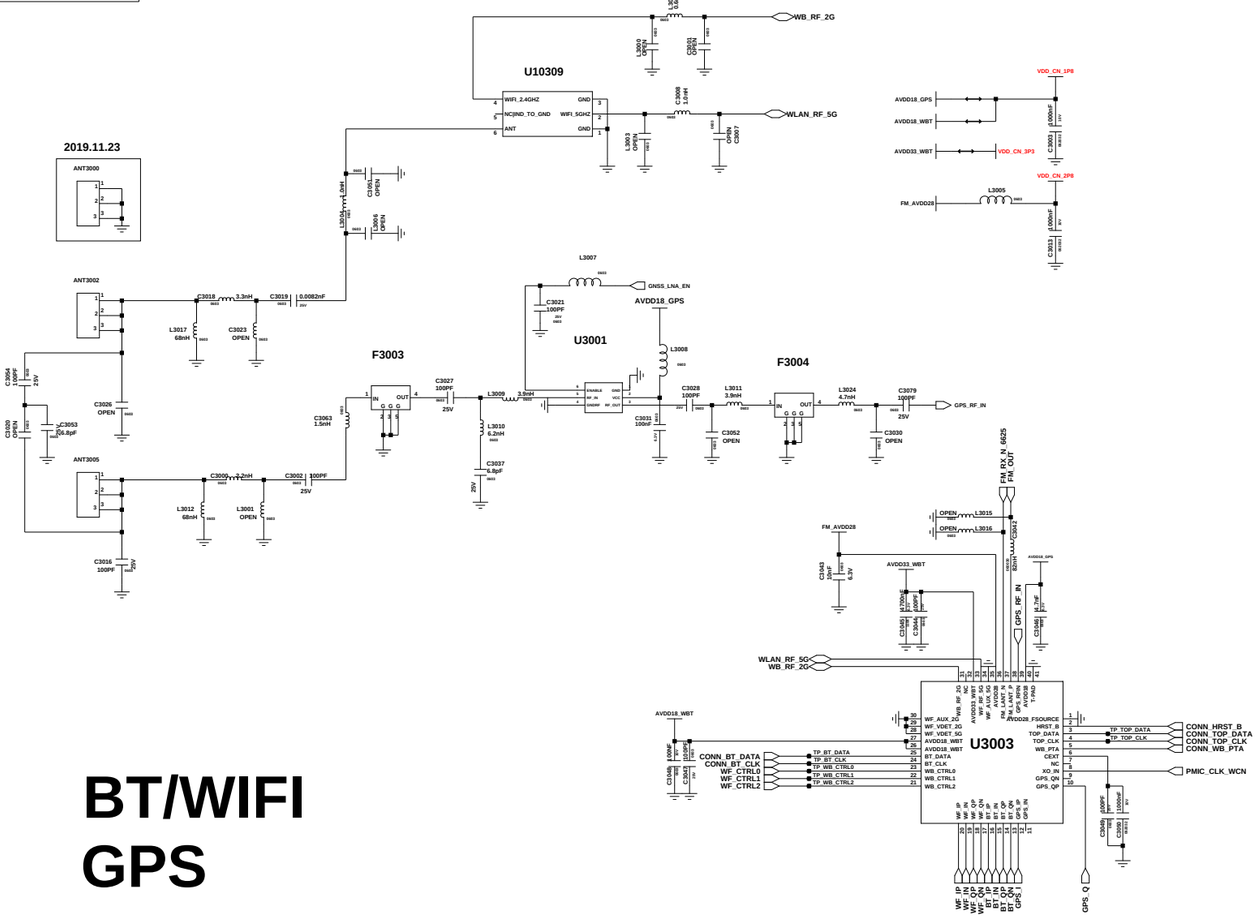

BT/WIFI GPS

NFC

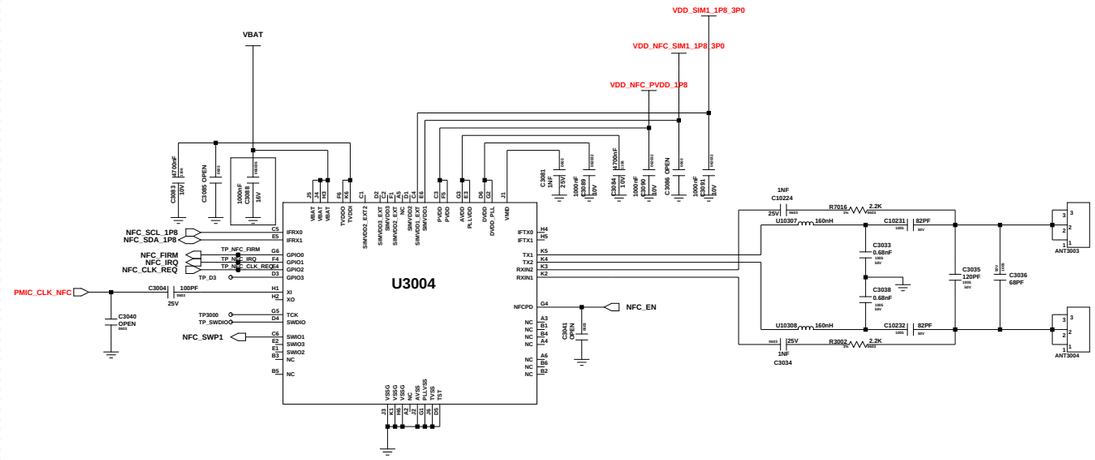

NFC	NFC PART	Power supply of SIM1		NFC_CHECK:GPIO52 (BPI_BUS15_ANT2)	
	U3004	R5031	R5032	R4032	R4036
NFC	CONNECT	short	open	10K ohm	open
nonNFC	NC	open	short	open	10K ohm

SENSORS

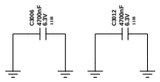

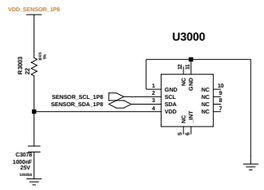

ALS Sensor

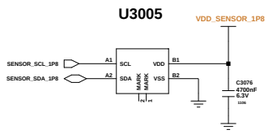

MAGNETIC

YAMAHA (0.97x0.97)

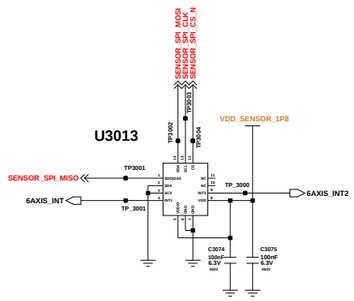

6 AXIS(ACC+GRYO)

STM(3x2.5)

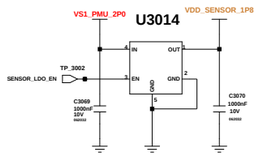

SENSOR LDO

Engineer:	SENSOR, WIFI/BT/GPS/NFC				
Drawn by:					
R&D CHK:	TITLE: SM-A315F				Size: A1
DCC CTRL CHK:					
MFG ENGR CHK:					
Changed by: user93	Date Changed:	Time Changed:	QA CHK:	REV:	Drawing Number:	Page: 97

SAMSUNG CONFIDENTIAL
THIS DOCUMENT CONTAINS CONFIDENTIAL
AND PROPRIETARY INFORMATION OF
SAMSUNG ELECTRONICS CO'S PROPERTY.
DO NOT DISCLOSE TO OR DUPLICATE FOR OTHERS
EXCEPT AS AUTHORIZED BY SAMSUNG.

AP_(MTK_MT6768_11*11.8)

U4000-1

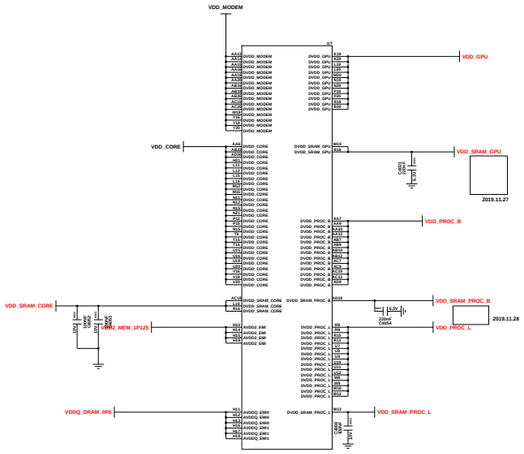

(1/7)

U4000-2

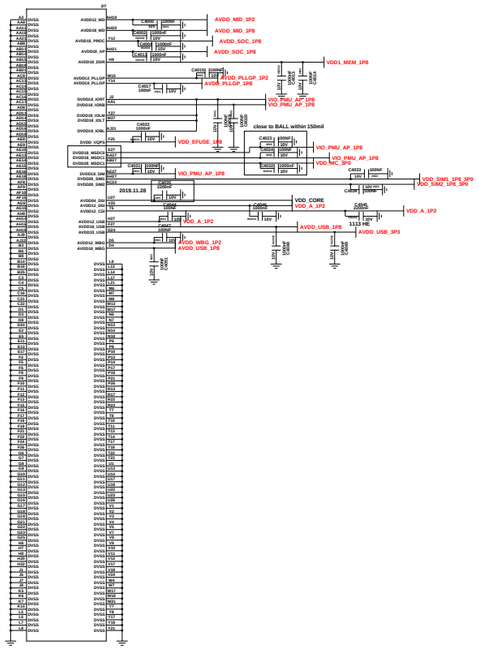

U4000-3

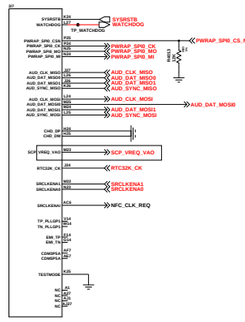

U4000-4

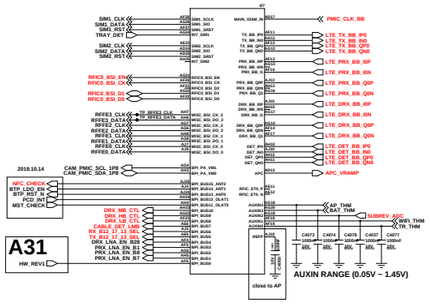

U4000-5

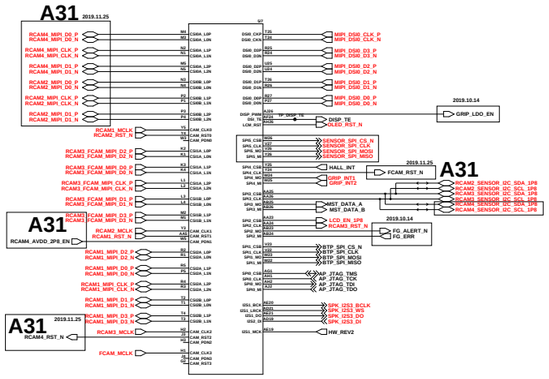

U4000-6

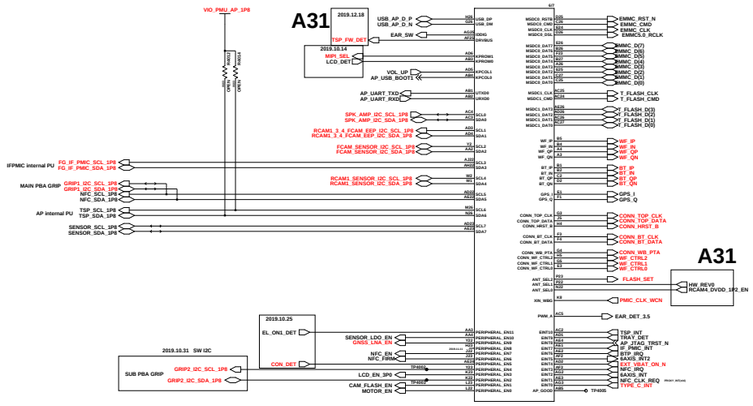

U4000-7

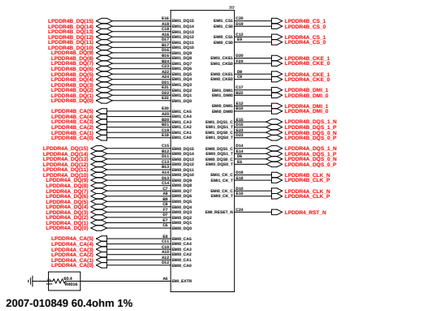

I2C Pull-up Register

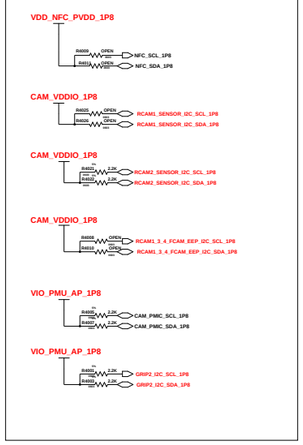

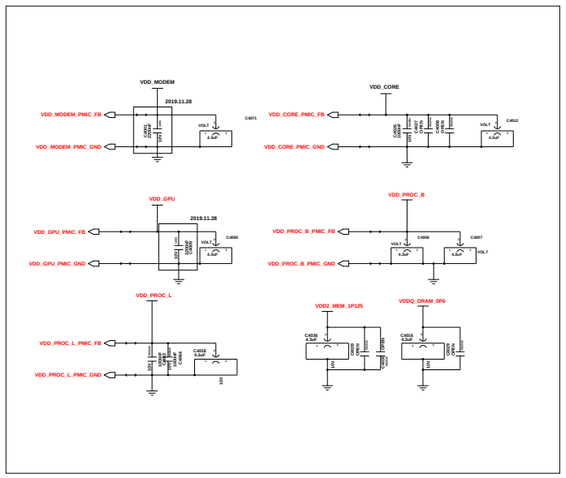

Thermister

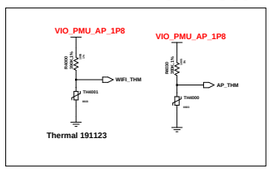

TSP FIRMWARE

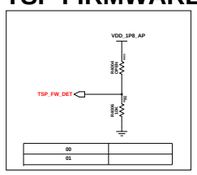

00	
01	

Not used in A31
(used in A41)

MST OPTION

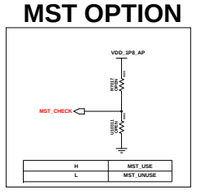

H	MST_USE
L	MST_UNUSE

NFC OPTION

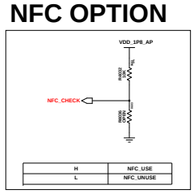

H	NFC_USE
L	NFC_UNUSE

H/W Revision Setting

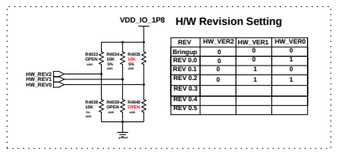

REV	HW_VER2	HW_VER1	HW_VER0
Bringup	0	0	0
REV 0.0	0	0	1
REV 0.1	0	1	0
REV 0.2	0	1	1
REV 0.3			
REV 0.4			
REV 0.5			

PCB JTAG

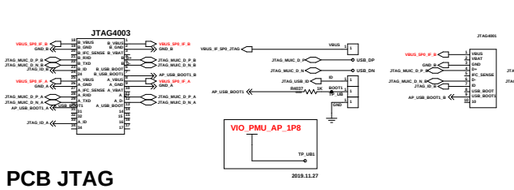

AP JTAG

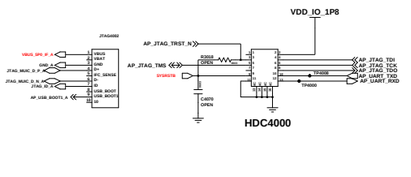

Engineer:	AP
Drawn by:	
R&D CHK:	TITLE:
DOC CTRL CHK:	SM-A315F
MFG ENGR CHK:	

Size: A0

Changed by: | Date Changed: | Time Changed: | Q/A CHK: | REV: | Drawing Number: | Page:

SAMSUNG CONFIDENTIAL
THIS DOCUMENT CONTAINS CONFIDENTIAL PROPRIETARY INFORMATION THAT IS SAMSUNG ELECTRONICS CO'S PROPERTY DO NOT DISCLOSE TO OR DUPLICATE FOR OTHERS EXCEPT AS AUTHORIZED BY SAMSUNG

MAIN_PMIC(MTK_MT6358_6.4x6)

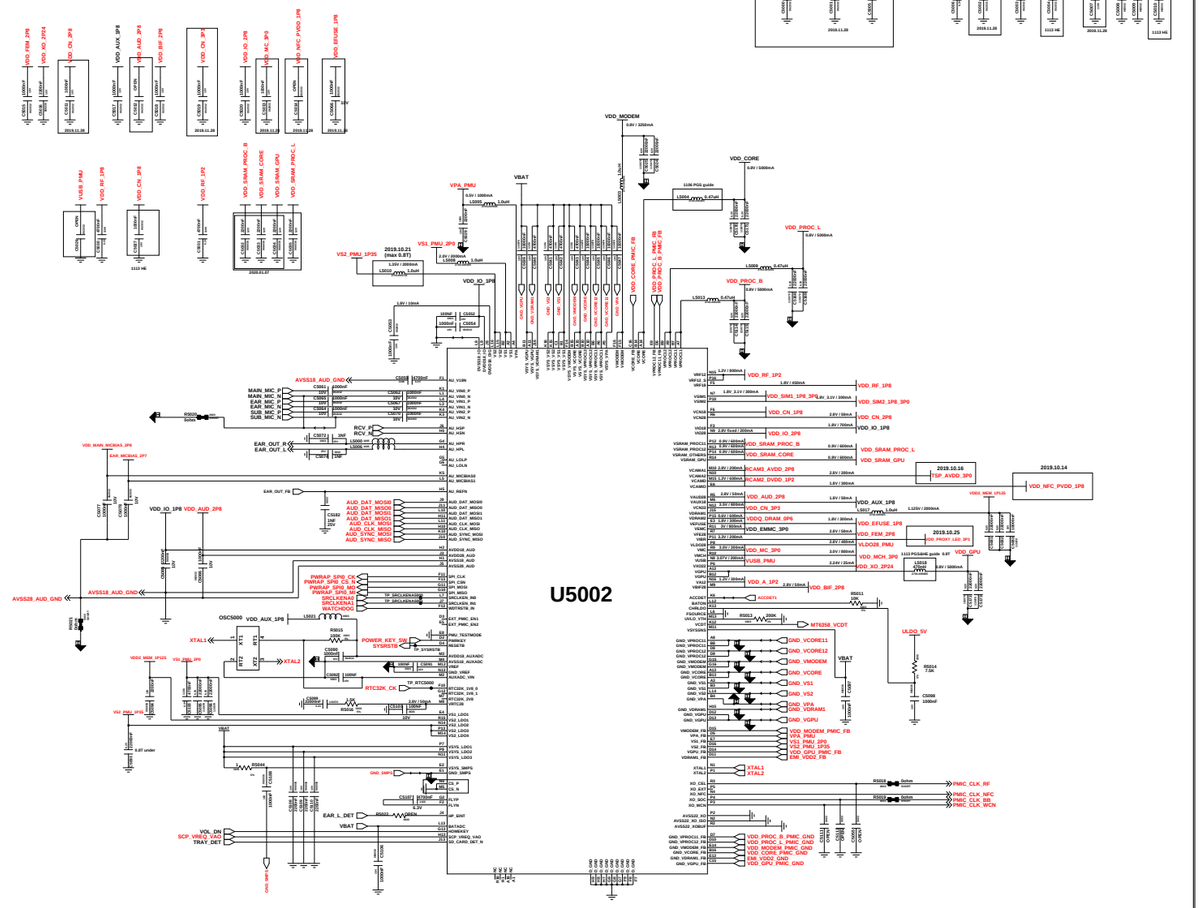
U5002
VDD_MODEM
VDD_CORE
VDD_PROC_L
VDD_PROC_B
VDD_IO_1P8
VDD_AUD_2P8
VDD_AUX_1P8
VDD_EFUSE_1P8
VDD_BIF_2P8
VDD_GPU
VDD_XO_2P24
VDD_MC_2P0
VDD_MCH_3P0
VDD_EMMC_3P0
VDD_CN_3P3
VDD_DRAM_0P6
VDD_FEM_2P8
VDD_SIM1_1P8_3P0
VDD_SIM2_1P8_3P0
VDD_RF_1P2
VDD_SRAM_PROC_B
VDD_SRAM_CORE
VDD_SRAM_GPU
VDD_SRAM_PROC_L
VDD_CN_2P8
VDD_IO_2P8
VDD_NFC_PVDD_1P8
VDD_PROXY_LED_3P3
VDD_IO_3P0
VBAT
VPA_PMU
VS1_PMU_2P0
VS2_PMU_1P35
VS2_PMU_2P0
VS2_PMU_1P8
VS2_PMU_1P2
VS2_PMU_1P25
VS2_PMU_0P6
VS2_PMU_0P6_2
VS2_PMU_0P6_3
VS2_PMU_0P6_4
VS2_PMU_0P6_5
VS2_PMU_0P6_6
VS2_PMU_0P6_7
VS2_PMU_0P6_8
VS2_PMU_0P6_9
VS2_PMU_0P6_10
VS2_PMU_0P6_11
VS2_PMU_0P6_12
VS2_PMU_0P6_13
VS2_PMU_0P6_14
VS2_PMU_0P6_15
VS2_PMU_0P6_16
VS2_PMU_0P6_17
VS2_PMU_0P6_18
VS2_PMU_0P6_19
VS2_PMU_0P6_20
VS2_PMU_0P6_21
VS2_PMU_0P6_22
VS2_PMU_0P6_23
VS2_PMU_0P6_24
VS2_PMU_0P6_25
VS2_PMU_0P6_26
VS2_PMU_0P6_27
VS2_PMU_0P6_28
VS2_PMU_0P6_29
VS2_PMU_0P6_30
VS2_PMU_0P6_31
VS2_PMU_0P6_32
VS2_PMU_0P6_33
VS2_PMU_0P6_34
VS2_PMU_0P6_35
VS2_PMU_0P6_36
VS2_PMU_0P6_37
VS2_PMU_0P6_38
VS2_PMU_0P6_39
VS2_PMU_0P6_40
VS2_PMU_0P6_41

SAMSUNG CONFIDENTIAL
THIS DOCUMENT CONTAINS CONFIDENTIAL
PROPRIETARY INFORMATION THAT IS
SAMSUNG ELECTRONICS CO'S PROPERTY.
DO NOT DISCLOSE TO OR DUPLICATE FOR OTHERS
EXCEPT AS AUTHORIZED BY SAMSUNG.

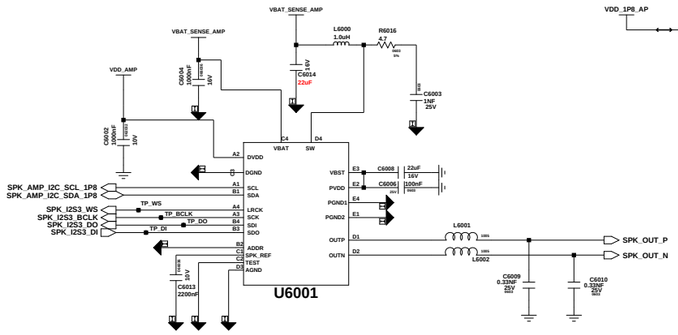

SPK AMP

Silicon Mitus

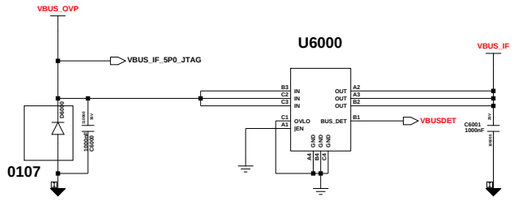

OVP (ETEK)

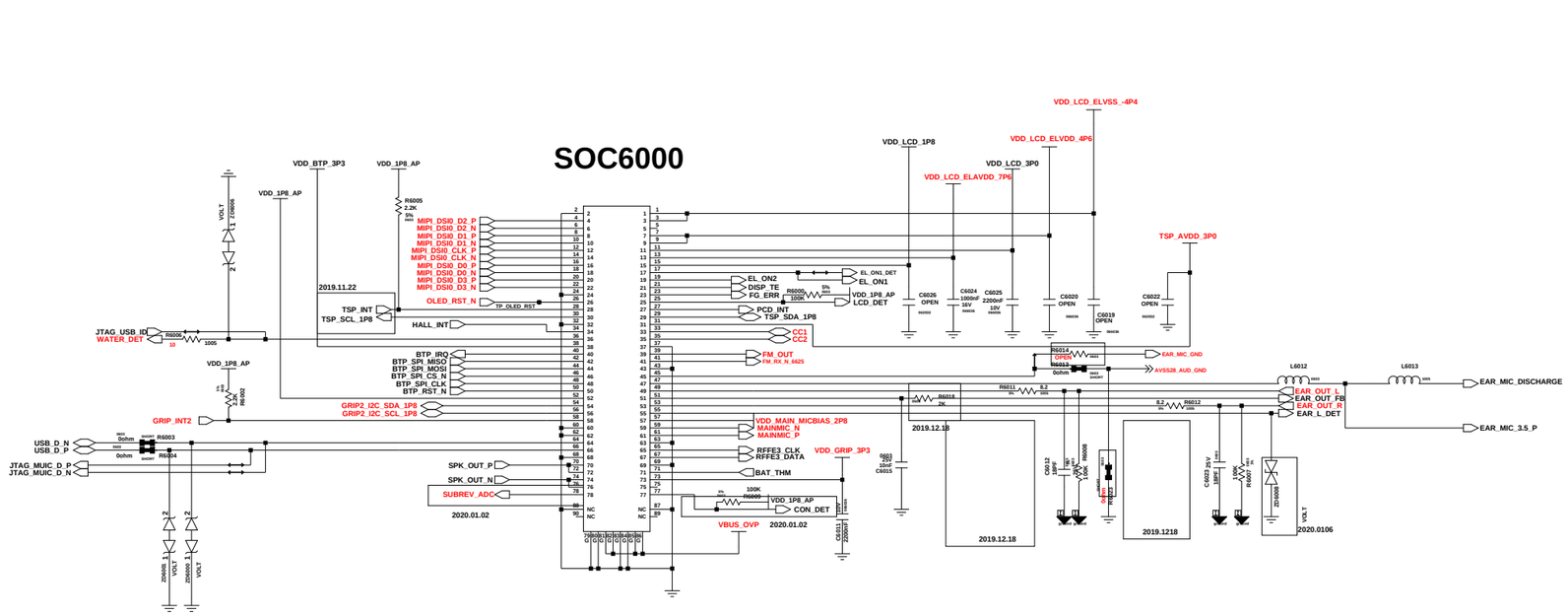

MAIN FPCB(78PIN)

DISPLAY(6.38" FHD+) & SUB PBA

AUDIO

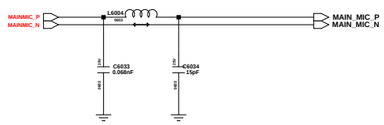

MAIN MIC

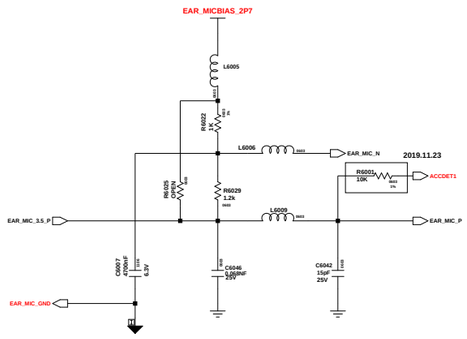

EAR MIC

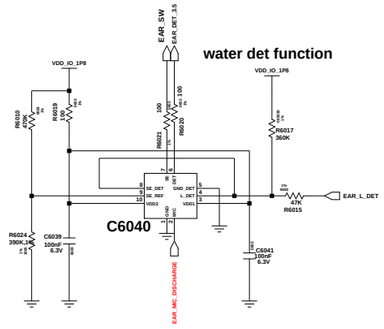

EAR detection IC

2019.12.18

EAR SW delete

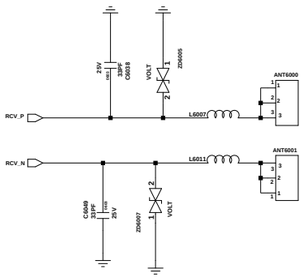

RCV CONTACT

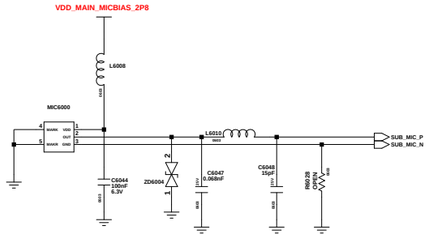

Sub MIC SANICO

Engineer:	AUDIO, SIM/SD, SHIELD CAN
Drawn by:	
R&D CHK:	TITLE: SM-A315F
DOC CTRL CHK:	Size: A1
MFG ENGR CHK:	
QA CHK:	REV: Drawing Number: Page:6/7

Changed by: | Date Changed: | Time Changed:

SAMSUNG CONFIDENTIAL
THIS DOCUMENT CONTAINS CONFIDENTIAL
PROPRIETARY INFORMATION THAT IS
SAMSUNG ELECTRONICS CO'S PROPERTY.
DO NOT DISCLOSE TO OR DUPLICATE FOR OTHERS
EXCEPT AS AUTHORIZED BY SAMSUNG.

CAMERA_PART

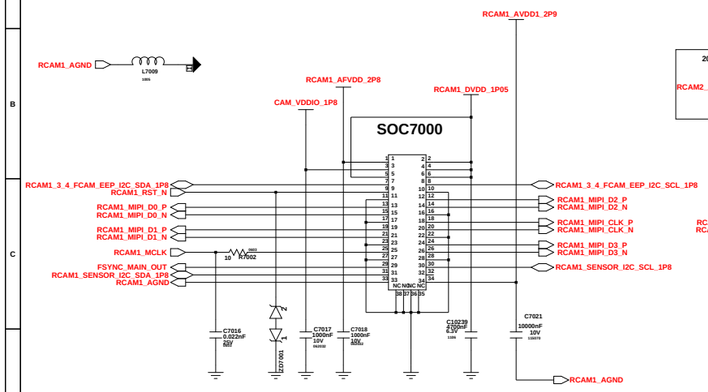

RCAM1_48M(34PIN)

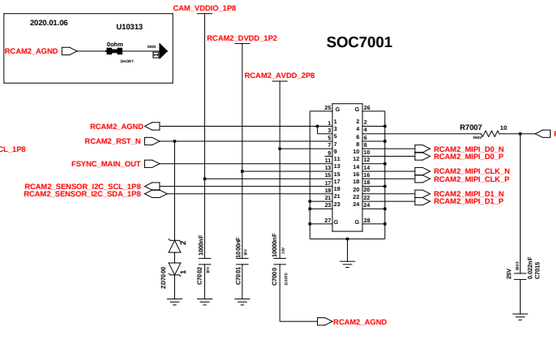

RCAM2_5M (24PIN)

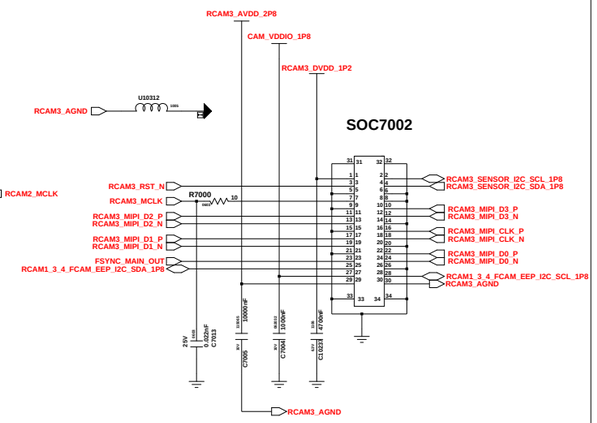

RCAM3_SUPER WIDE_8M(30pin)

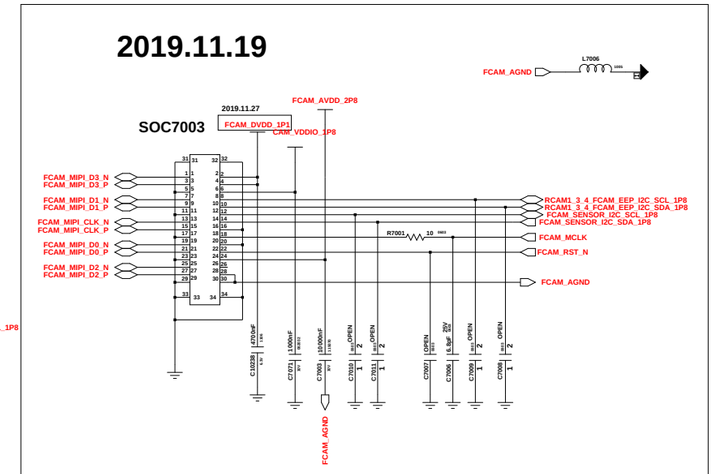

FCAM_20M(30PIN)

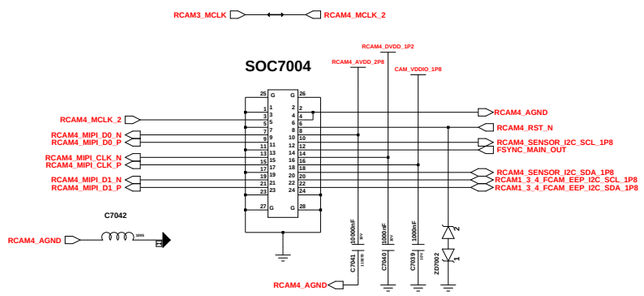

RCAM4_5M Macro(24PIN)

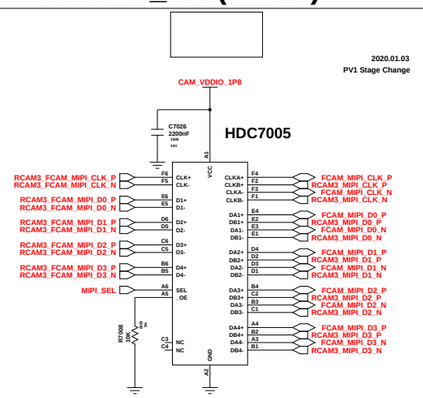

MIPI SW (RCAM3 & FCAM)

Diodes (2.44 x 2.44)

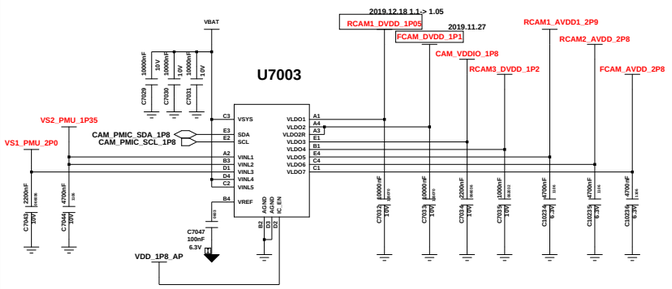

CAM PMIC

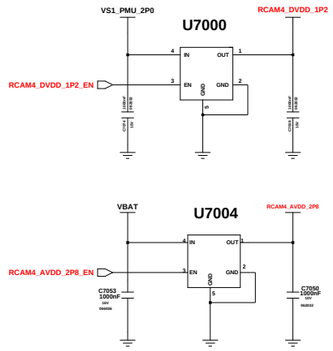

RCAM4 LDO

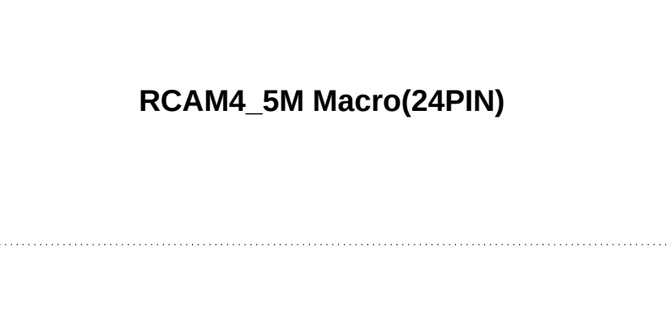

OCTA DCDC

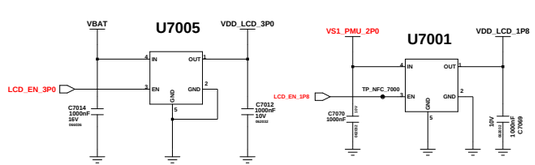

OCTA LDO

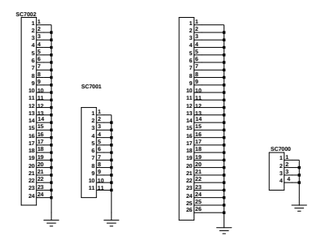

SHIELD CAN

2D BARCODE

BH7000

BOSS HOLE

8/128 ALL SHOT

REGION		MEMORY		TOP
R7003 0ohm	G(SEA,LA)	R7006 0ohm	4/64	R7011 0ohm
R7009 0ohm	F(CIS,MEA,SWA)	R7010 0ohm	4/128	R7012 0ohm
R7005 0ohm	N(KOREA)	R7004 0ohm	6/128	R7013 0ohm
R7014 0ohm	NFC_X (Short = Not use)	R7015 0ohm	6/64	U10314 0ohm

Engineer:	CAMERA, DISPLAY		
Drawn by:			
R&D CHK:	TITLE: SM-A315F	Size: A1	
DOC CTRL CHK:			
MFG ENGR CHK:			
Changed by: / Date Changed: / Time Changed:	QA CHK:	REV	Drawing Number: / Page: 2/2

SM-A315F

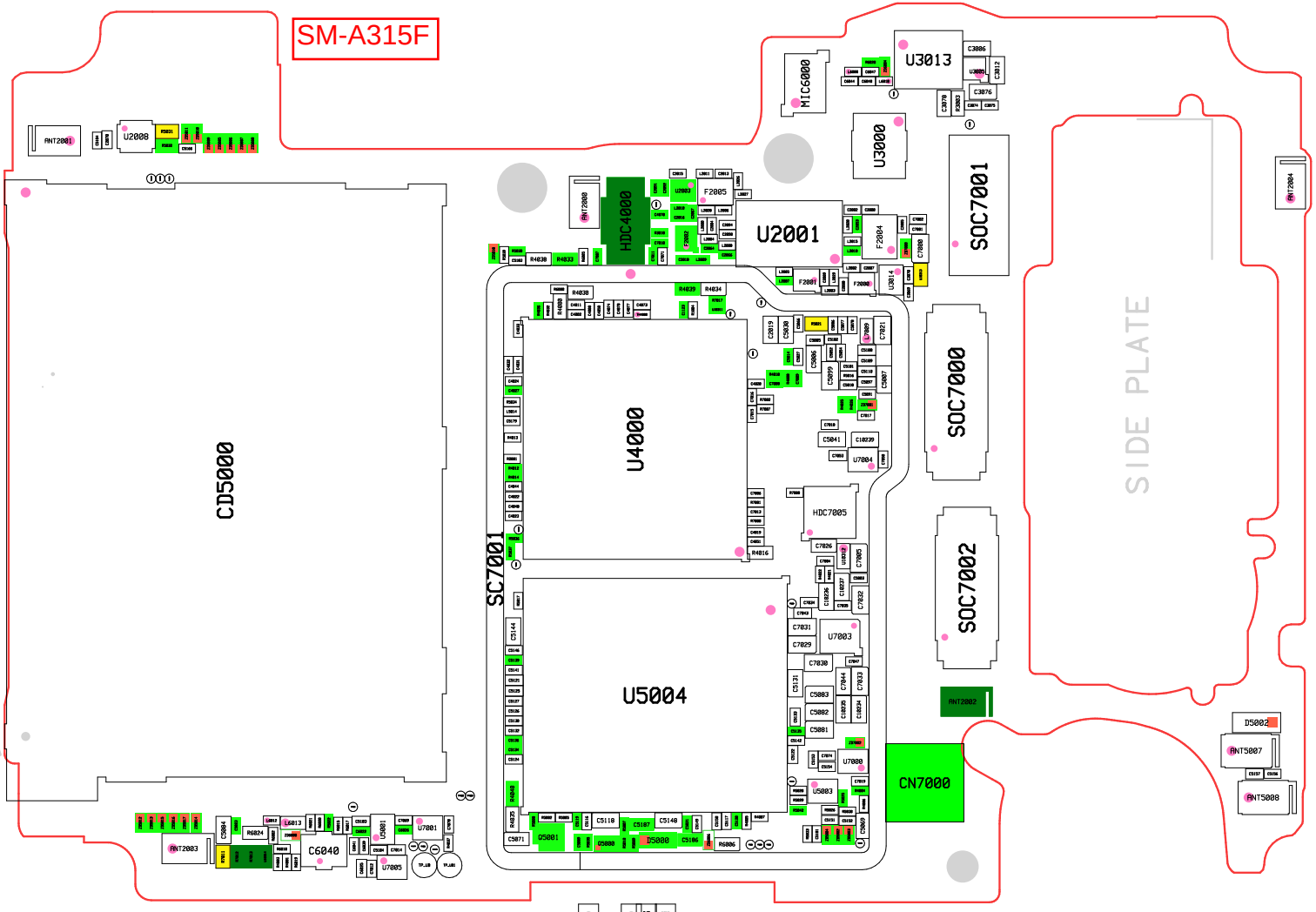
ANT2001
U2008
CD5000
MIC6000
U3013
U3000
SOC7001
SOC7000
SOC7002
SIDE PLATE
ANT2004
HDC4000
U2001
F2005
F2004
F2001
U3014
U4000
SC7001
HDC7005
U7004
U7003
U5004
U7000
U5003
ANT2002
CN7000
D5002
ANT5007
ANT5008
ANT2003
C6040
U7005
U7001
D5000
D5001
VBUS
ID
GND

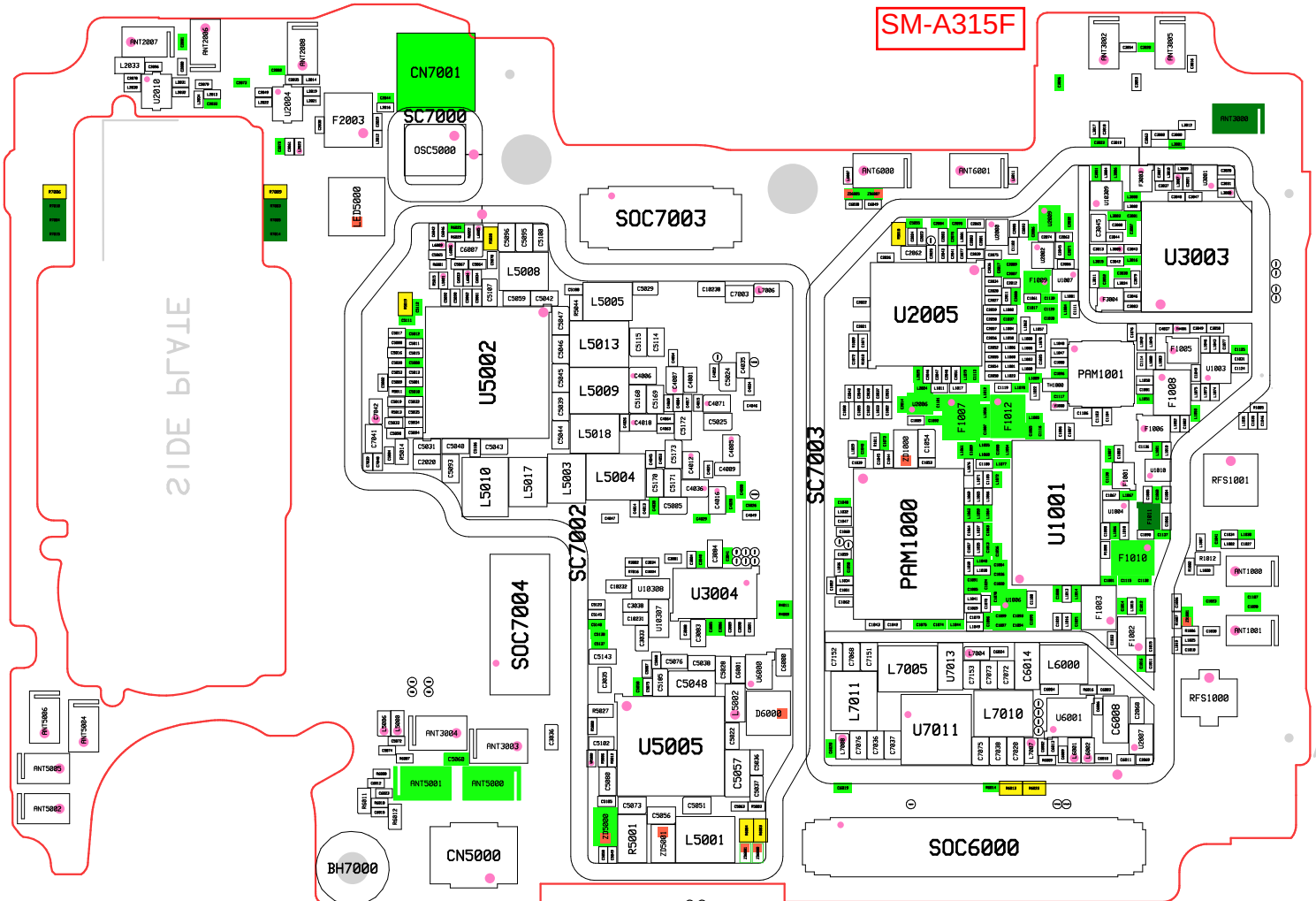
SM-A315F
CN7001
SC7000
OSC5000
F2003
SOC7003
SC7002
SC7003
SOC7004
SOC6000
CN5000
BH7000
U5002
U5005
U3004
U2005
U3003
U1001
PAM1000
PAM1001
SIDE PLATE

SM-A315G_SEA

SAMSUNG CONFIDENTIAL
THIS DOCUMENT CONTAINS CONFIDENTIAL PROPRIETARY INFORMATION THAT IS SAMSUNG ELECTRONICS CO'S PROPERTY. DO NOT DISCLOSE TO OR DUPLICATE FOR OTHERS EXCEPT AS AUTHORIZED BY SAMSUNG.

	CIS/SWA/MEA	LATIN/SEA	KOR
FDD	1/ 2/ 3/ 5/ 7/ 8/ 20	1/2/3/4/5/7/8/12/13/17/20/28/66	1/ 3/ 5/ 7/ 8/ 17/ 20/ 28
TDD	38/ 40/ 41	38/ 40/ 41	38/ 40/ 41
3G	1/ 2/ 5/ 8	1/2/4/5/8	1/ 2/ 5/ 8
2G	850/900/1800/1900	850/900/1800/1900	850/900/1800/1900

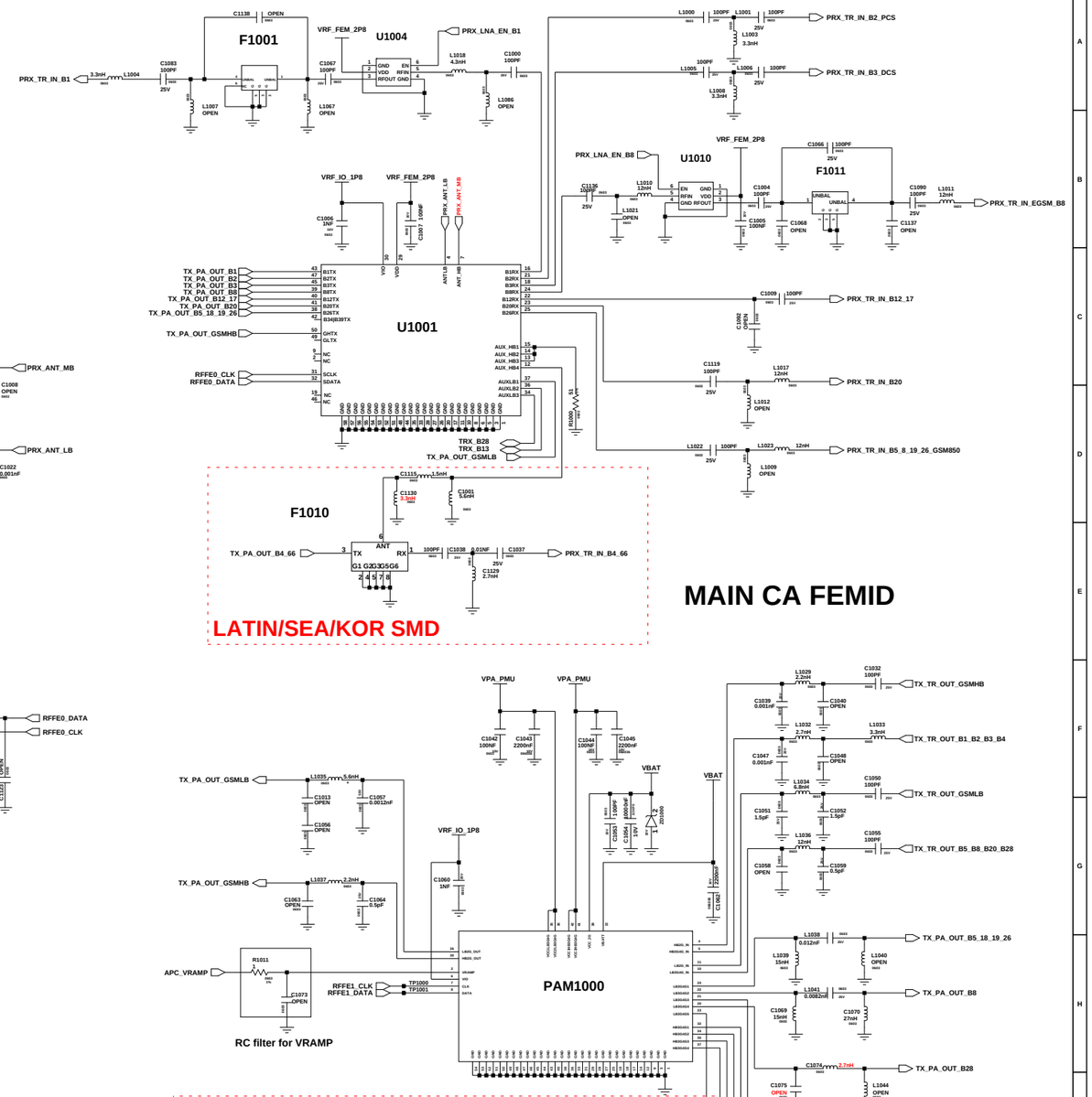

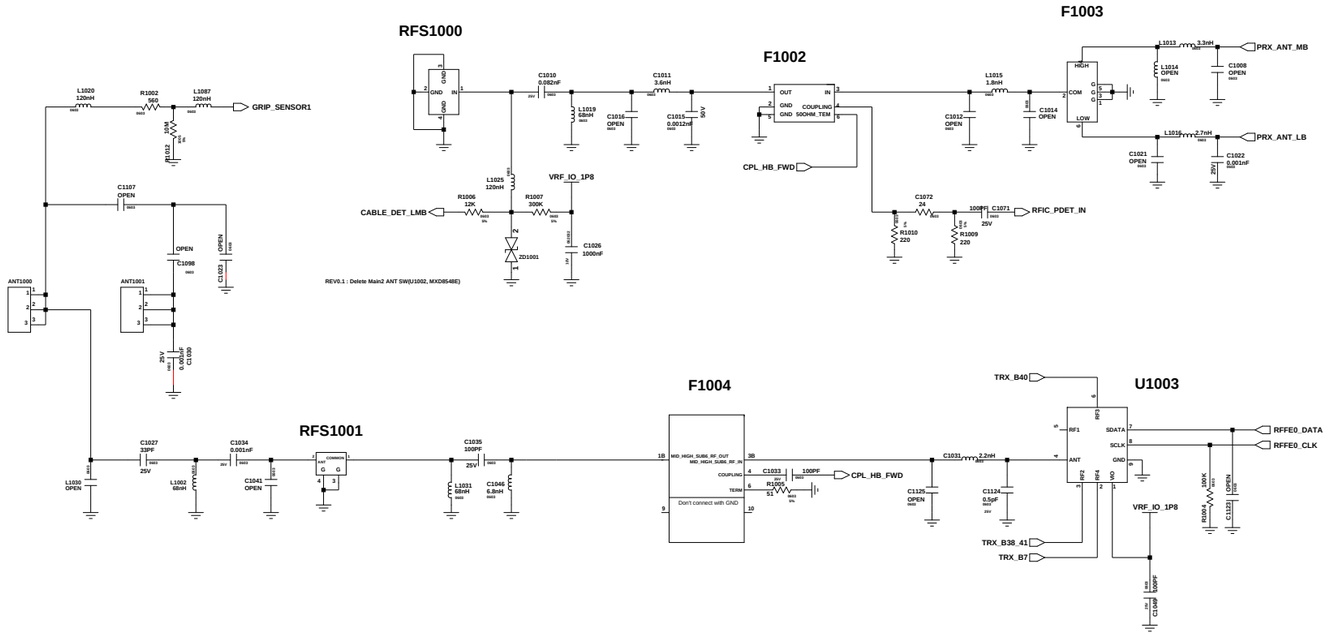

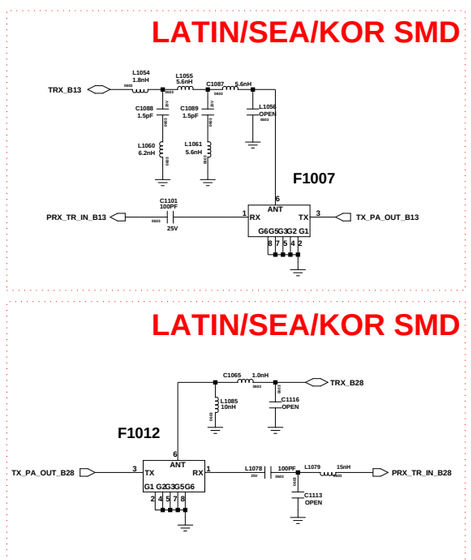

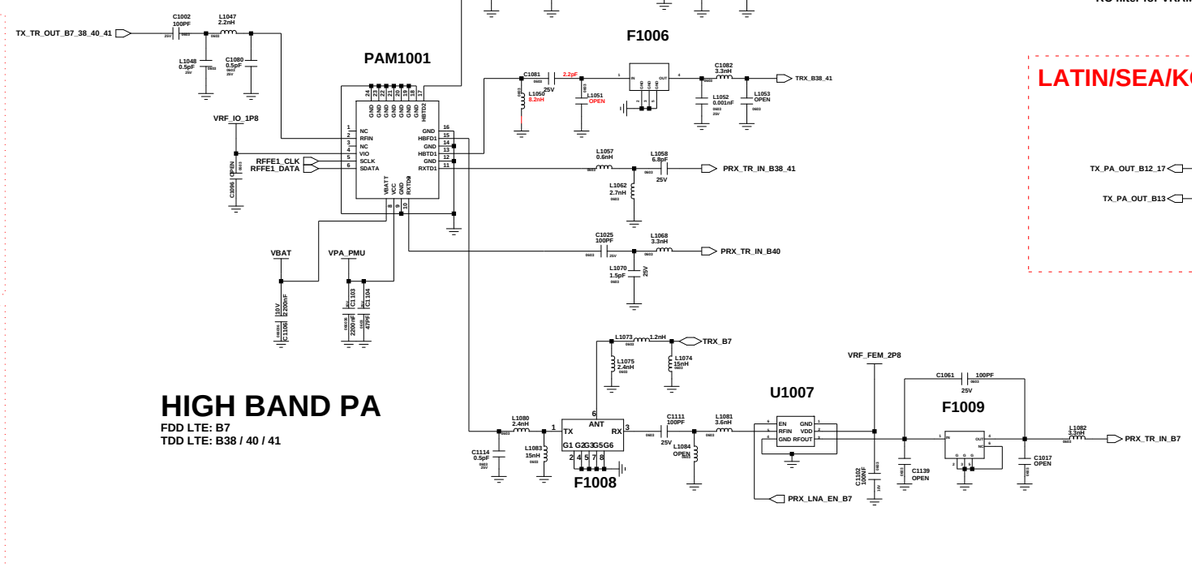

Engineer: user	SAMSUNG ELECTRONICS		
Drawn by: user			
R&D CHK:	TITLE:	Size: A1	
DOC CTRL CHK:		16 x 12 A	
MFG ENGR CHK:			
QA CHK:	REV	Drawing Number:	Page: 1

Changed by:	Date Changed:	Time Changed:
user	Monday, April 23, 2018	8:49:04 pm

SAMSUNG CONFIDENTIAL
THIS DOCUMENT CONTAINS CONFIDENTIAL PROPRIETARY INFORMATION THAT IS SAMSUNG ELECTRONICS CO'S PROPERTY. DO NOT DISCLOSE TO OR DUPLICATE FOR OTHERS EXCEPT AS AUTHORIZED BY SAMSUNG.

	CIS/SWA/MEA	LATIN/SEA	KOR
FDD	1/ 2/ 3/ 5/ 7/ 8/ 20	1/2/3/4/5/7/8/12/13/17/20/28/66	1/ 3/ 5/ 7/ 8/ 17/ 20/ 28
TDD	38/ 40/ 41	38/ 40/ 41	38/ 40/ 41
3G	1/ 2/ 5/ 8	1/2/4/5/8	1/ 2/ 5/ 8
2G	850/900/1800/1900	850/900/1800/1900	850/900/1800/1900

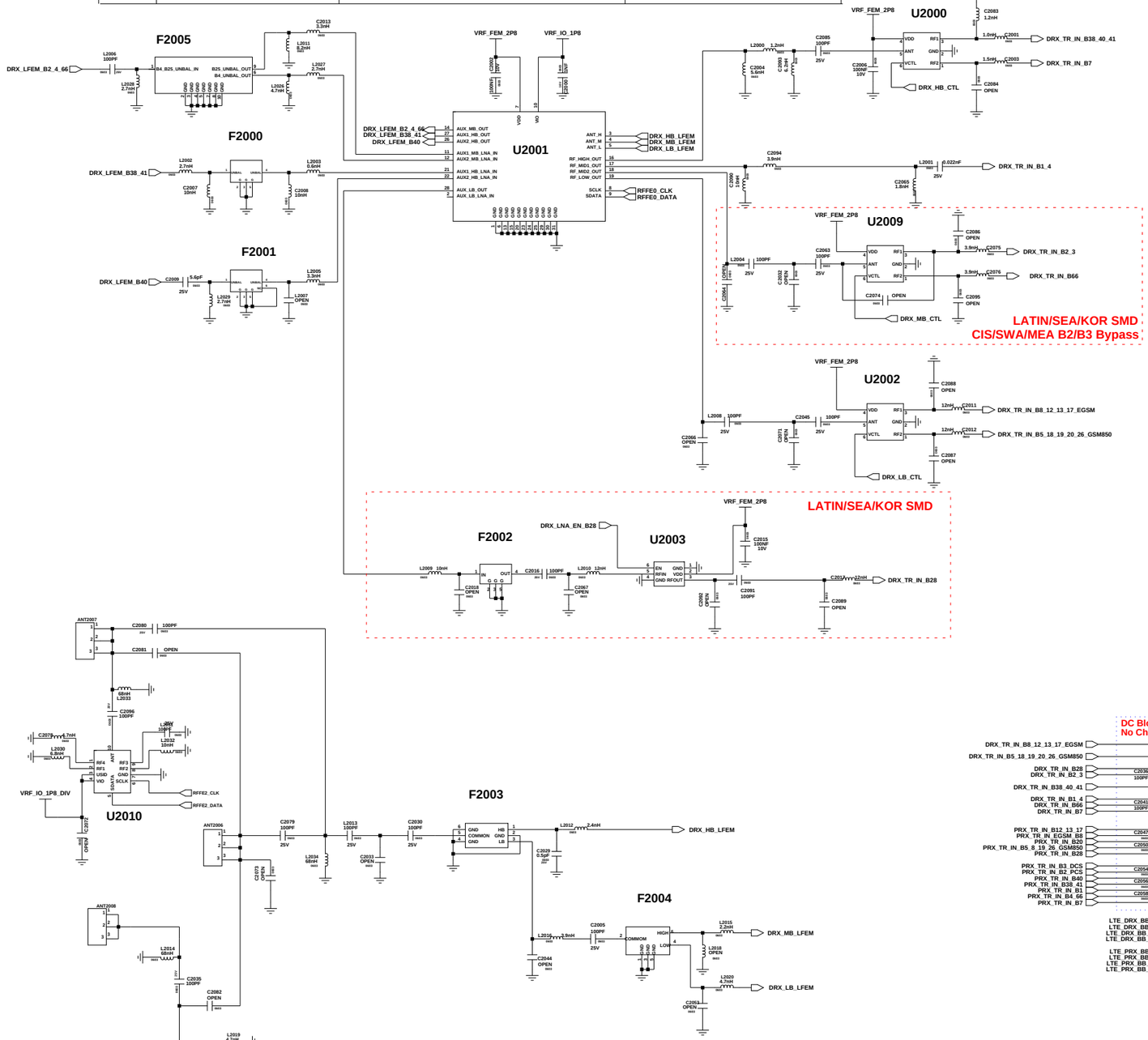

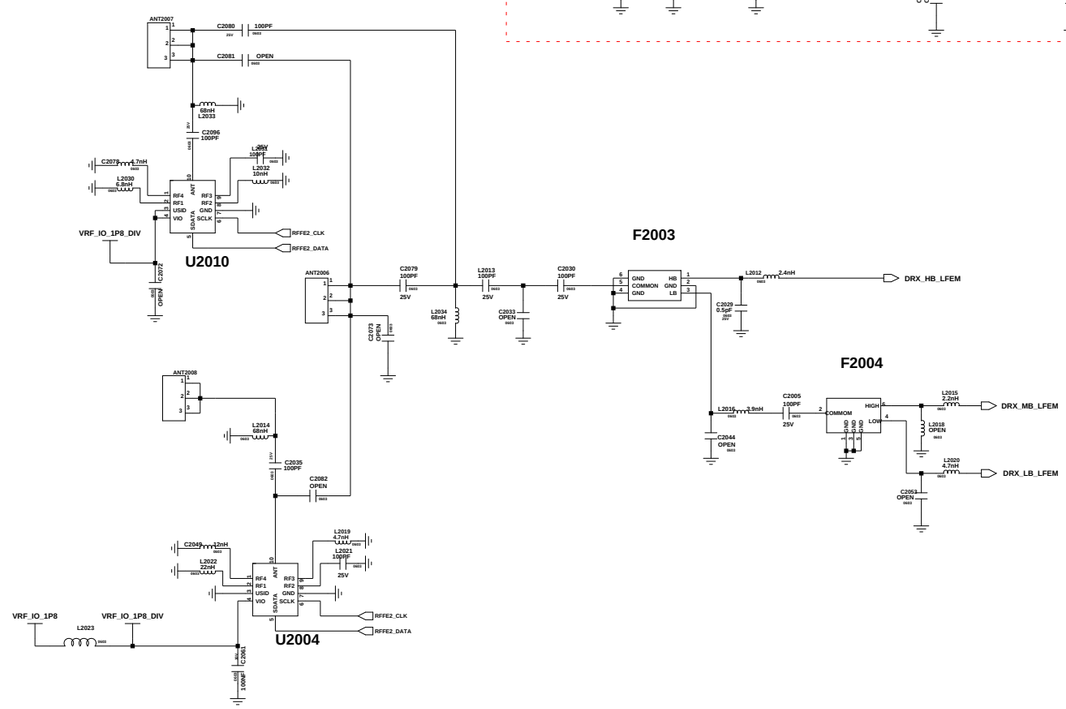

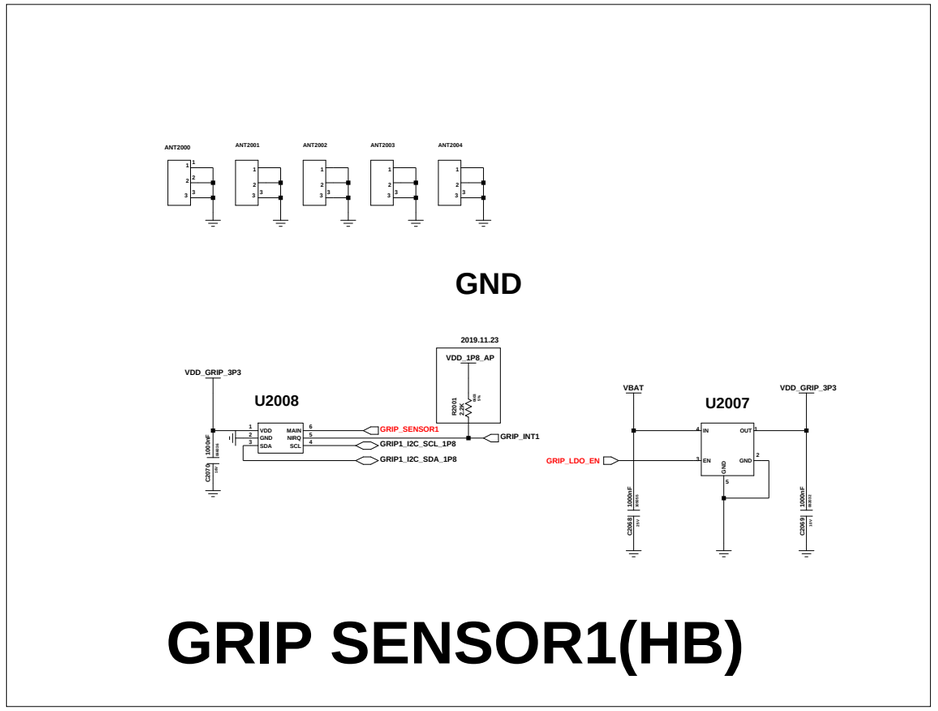

TRANCEIVER

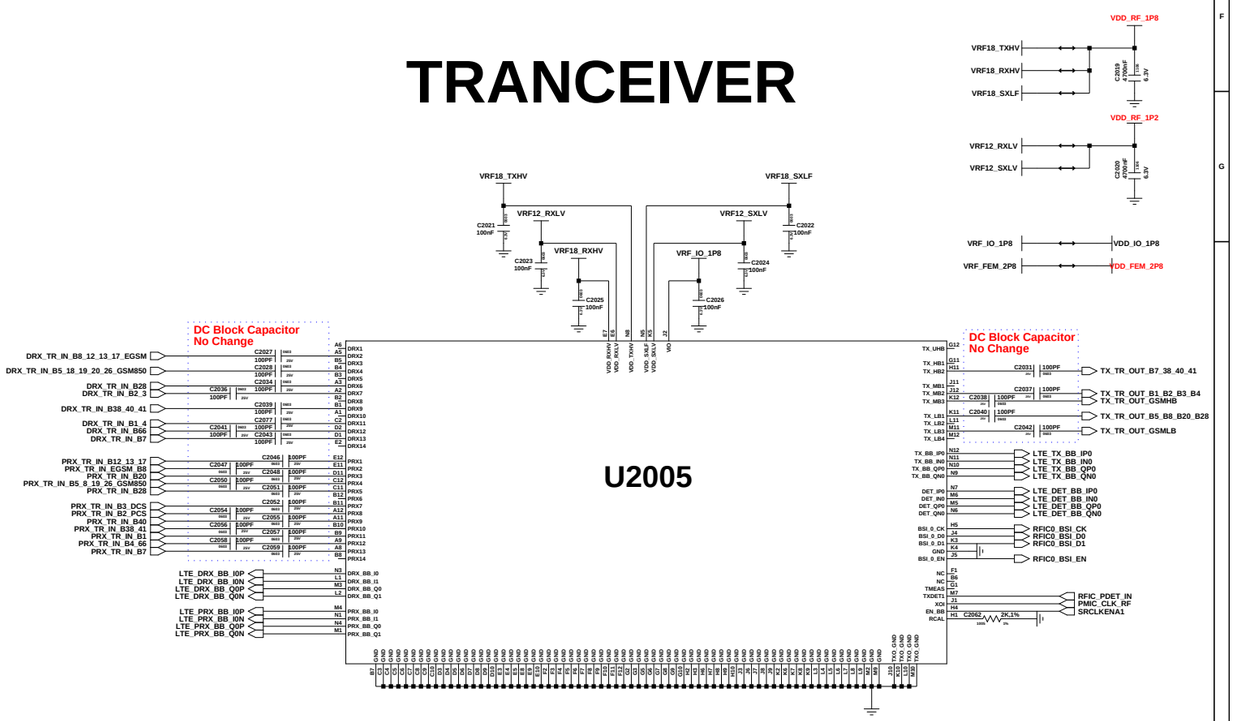

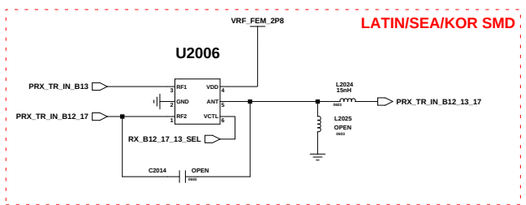

Engineer	DRX, TRANCEIVER
Drawn by:	TITLE:
R&D CHK:	SM-A315F
DOC CTRL CHK:	Size: A3
MFG ENGR CHK:	
QA CHK:	Drawing Number: 2/7

Changed by: | Date Changed: | Time Changed:

SAMSUNG CONFIDENTIAL
THIS DOCUMENT CONTAINS CONFIDENTIAL
PROPRIETARY INFORMATION THAT IS
SAMSUNG ELECTRONICS CO'S PROPERTY.
DO NOT DISCLOSE TO OR DUPLICATE FOR OTHERS
EXCEPT AS AUTHORIZED BY SAMSUNG.

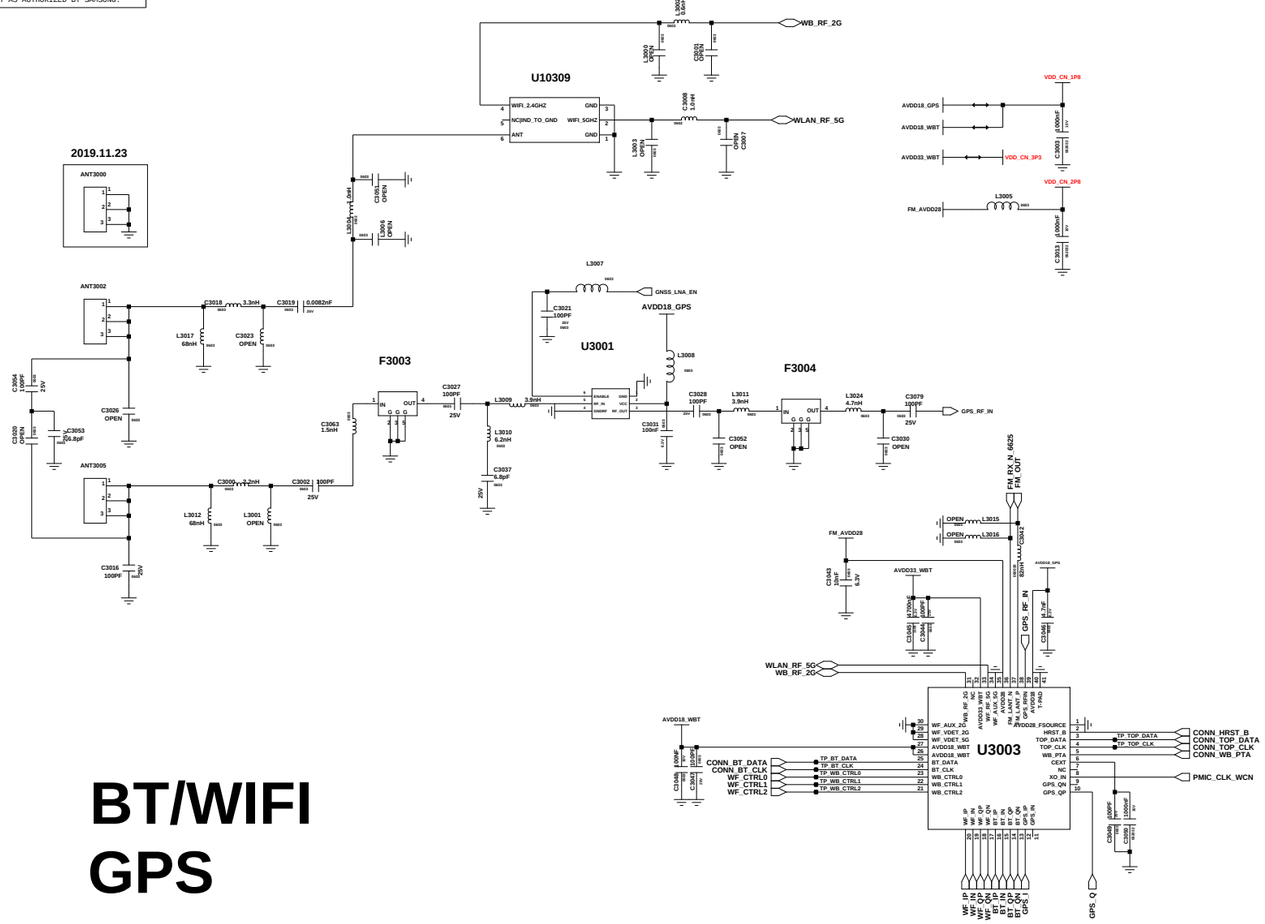

BT/WIFI GPS

NFC

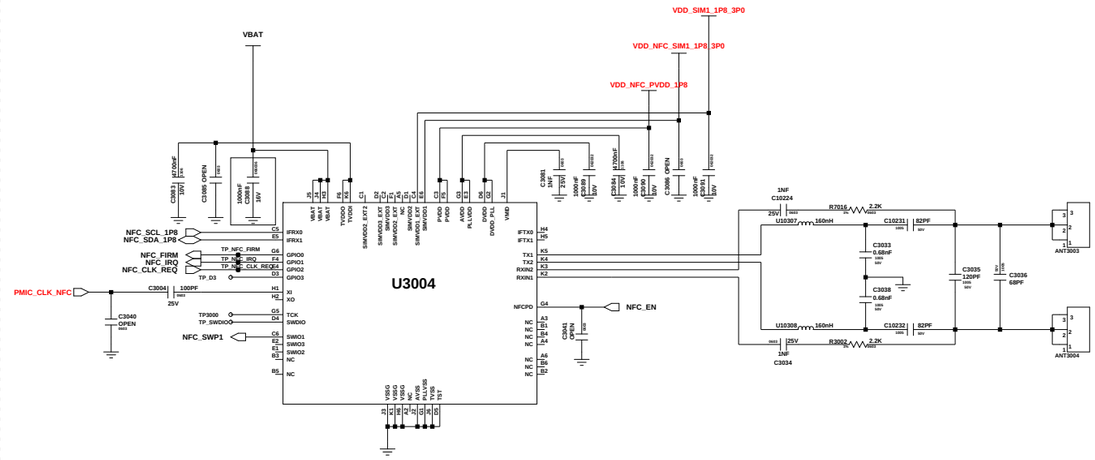

NFC	NFC PART	Power supply of SIM1		NFC_CHECK:GPIO52 (BPI_BUS15_ANT2)	
	U3004	R5031	R5032	R4032	R4036
NFC	CONNECT	short	open	10K ohm	open
nonNFC	NC	open	short	open	10K ohm

SENSORS

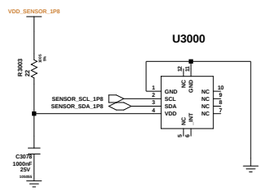

ALS Sensor

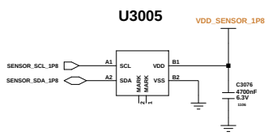

MAGNETIC

YAMAHA (0.97x0.97)

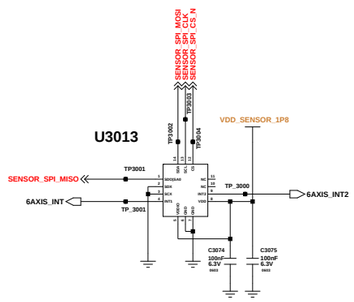

6 AXIS(ACC+GRYO)

STM(3x2.5)

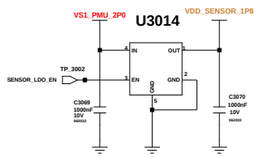

SENSOR LDO

Engineer:	SENSOR, WIFI/BT/GPS/NFC				
Drawn by:					
R&D CHK:	TITLE: SM-A315F				Size: A1
DCC CTRL CHK:					
MFG ENGR CHK:					
Changed by: user93	Date Changed:	Time Changed:	QA CHK:	REV:	Drawing Number:	Page: 97

SAMSUNG CONFIDENTIAL
THIS DOCUMENT CONTAINS CONFIDENTIAL
AND PROPRIETARY INFORMATION OF
SAMSUNG ELECTRONICS CO'S PROPERTY.
DO NOT DISCLOSE TO OR DUPLICATE FOR OTHERS
EXCEPT AS AUTHORIZED BY SAMSUNG.

AP_(MTK_MT6768_11*11.8)

U4000-1

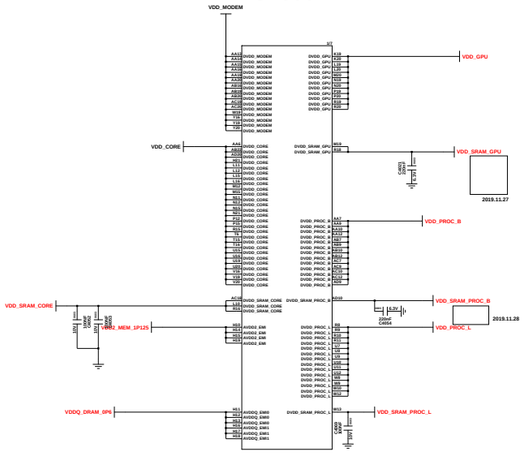

(1/7)

U4000-2

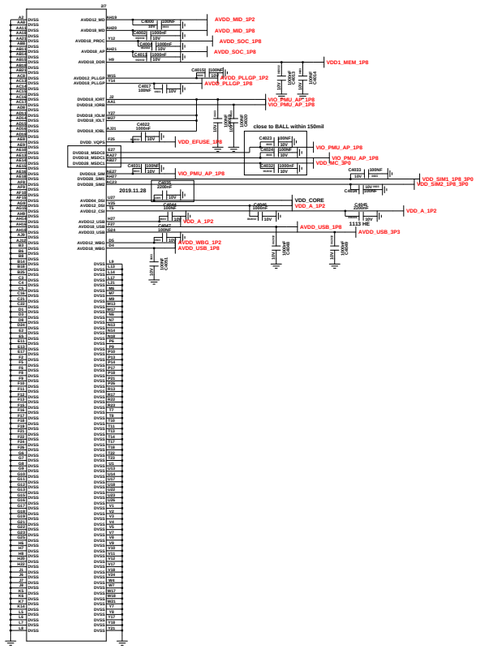

U4000-3

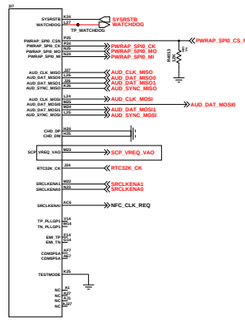

U4000-4

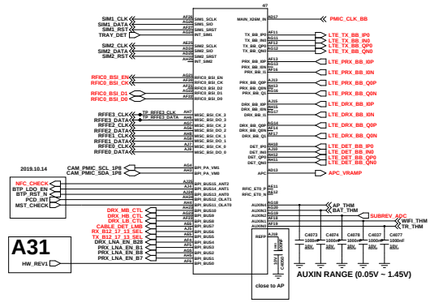

U4000-5

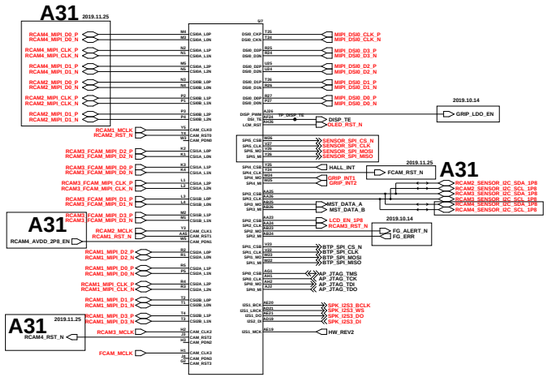

U4000-6

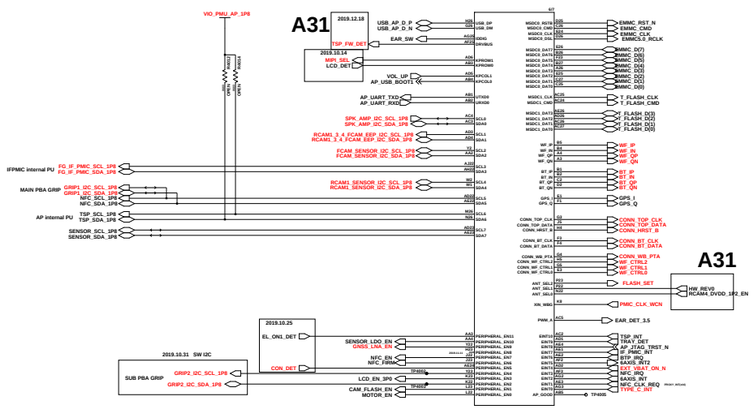

U4000-7

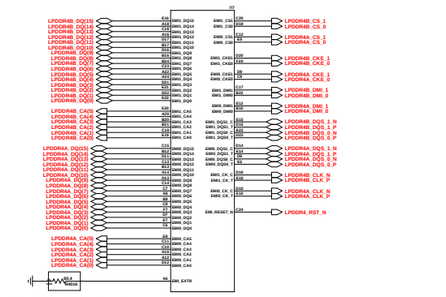

I2C Pull-up Register

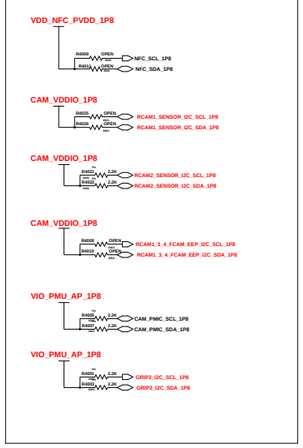

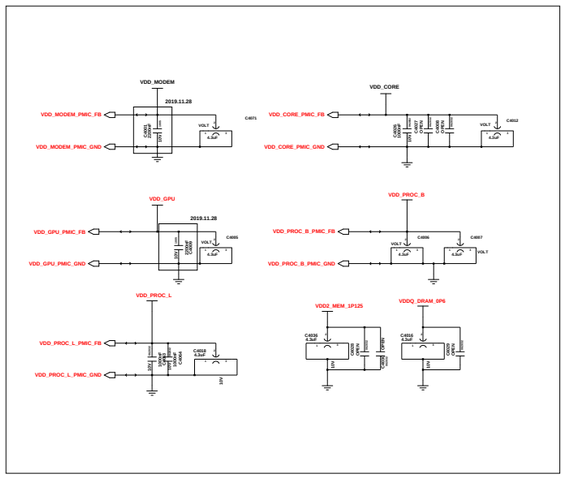

Thermister

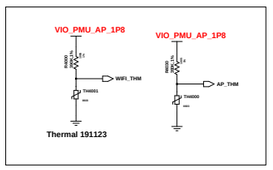

TSP FIRMWARE

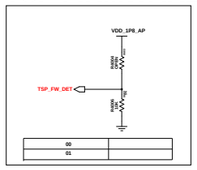

00	
01	

Not used in A31
(used in A41)

MST OPTION

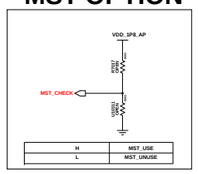

H	MST_USE
L	MST_UNUSE

NFC OPTION

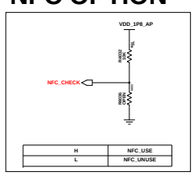

H	NFC_USE
L	NFC_UNUSE

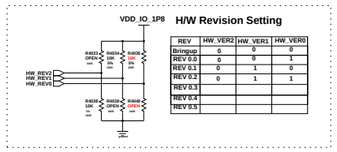

H/W Revision Setting

REV	HW_VER2	HW_VER1	HW_VER0
Bringup	0	0	0
REV 0.0	0	0	1
REV 0.1	0	1	0
REV 0.2	0	1	1
REV 0.3			
REV 0.4			
REV 0.5			

PCB JTAG

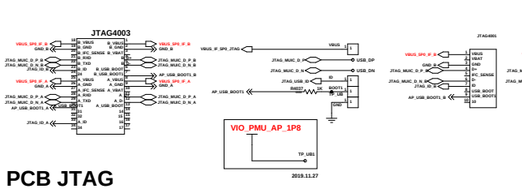

AP JTAG

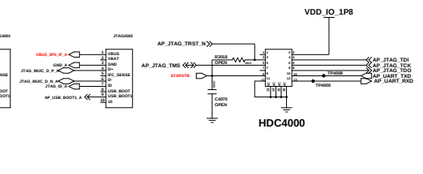

Engineer:	AP
Drawn by:	
R&D CHK:	TITLE:
DOC CTRL CHK:	SM-A315F
MFG ENGR CHK:	Size: A0

Changed by: | Date Changed: | Time Changed: | Q/A CHK: | REV: | Drawing Number: | Page:

SAMSUNG CONFIDENTIAL
THIS DOCUMENT CONTAINS CONFIDENTIAL PROPRIETARY INFORMATION THAT IS SAMSUNG ELECTRONICS CO'S PROPERTY. DO NOT DISCLOSE TO OR DUPLICATE FOR OTHERS EXCEPT AS AUTHORIZED BY SAMSUNG.

MAIN_PMIC(MTK_MT6358_6.4x6)

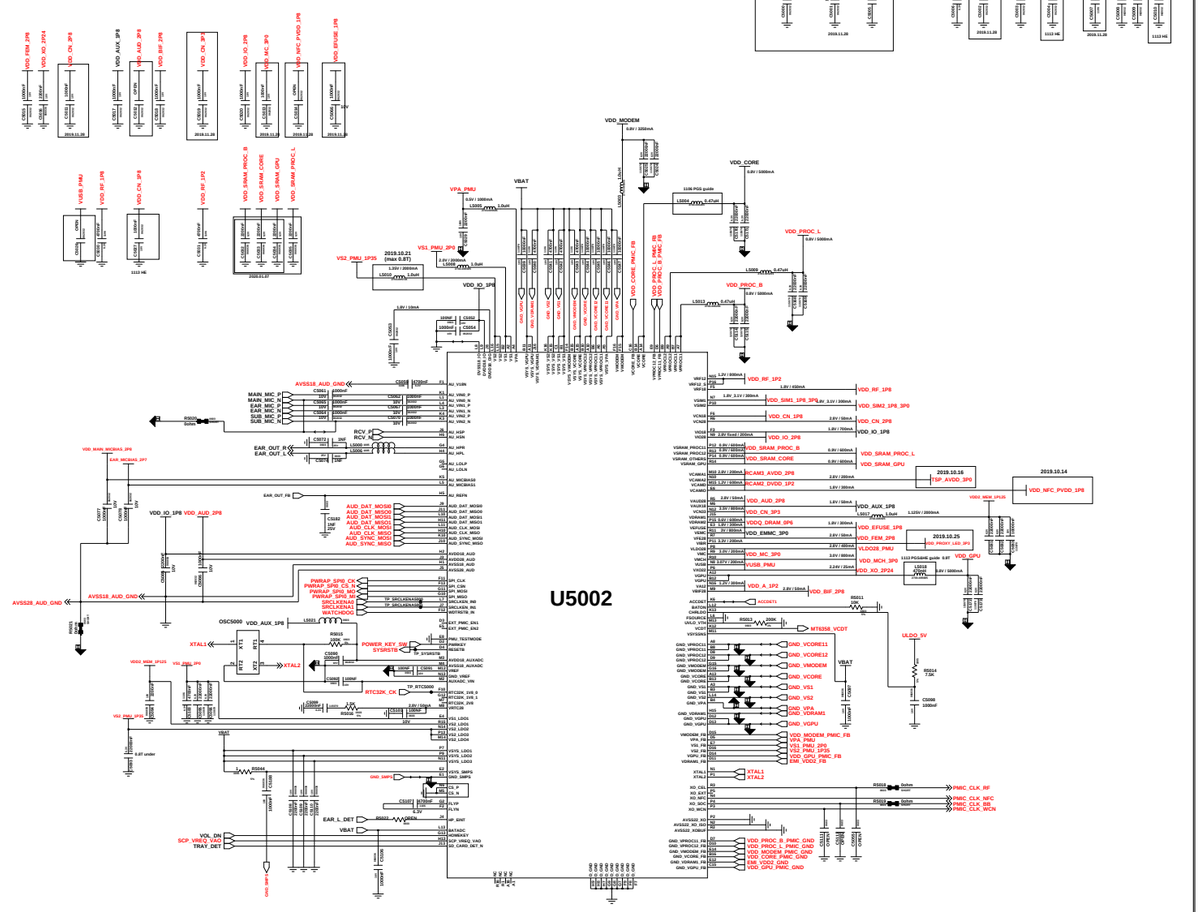
U5002
VDD_MODEM
VDD_CORE
VDD_PROC_L
VDD_PROC_B
VDD_IO_1P8
VDD_AUD_2P8
VDD_AUX_1P8
VDD_RF_1P2
VDD_SIM1_1P8_3P0
VDD_SIM2_1P8_3P0
VDD_CN_2P8
VDD_SRAM_PROC_B
VDD_SRAM_PROC_L
VDD_SRAM_CORE
VDD_SRAM_GPU
VDD_AUD_2P8
VDD_CN_3P3
VDD_DRAM_0P6
VDD_EMMC_3P0
VDD_MC_2P0
VDD_USB_PMU
VDD_A_1P2
VDD_BIF_2P8
VDD_EFUSE_1P8
VDD_FEM_2P8
VDD_MCH_3P0
VDD_XO_2P24
VDD_GPU
VDD_NFC_PVDD_1P8
VDD_MIC_2P0
VDD_SIM1_1P8_3P0
VDD_SIM2_1P8_3P0
VDD_CN_2P8
VDD_IO_1P8
VDD_AUX_1P8
VDD_AUD_2P8
VDD_EMMC_3P0
VDD_MC_2P0
VDD_USB_PMU
VDD_A_1P2
VDD_BIF_2P8
VDD_EFUSE_1P8
VDD_FEM_2P8
VDD_MCH_3P0
VDD_XO_2P24
VDD_GPU
VDD_NFC_PVDD_1P8
VDD_PROCY_LED_3P3
VDD_DRAM_1P6
VDD_SIM1_1P8_3P0
VDD_SIM2_1P8_3P0
VDD_MC_2P0
VDD_USB_PMU
VDD_MODEM_PMIC_FB
VDD_PROC_B_PMIC_GND
VDD_PROC_L_PMIC_GND
VDD_MODEM_PMIC_GND
VDD_CORE_PMIC_GND
EMI_VDD2_GND
VDD_GPU_PMIC_GND
PMIC_CLK_RF
PMIC_CLK_NFC
PMIC_CLK_WB
PMIC_CLK_WCN
AVSS18_AUD_GND
AVSS28_AUD_GND
OSC5000
VDD_AUX_1P8
XTAL1
XTAL2
POWER_KEY_SW
SYSRSTB
RTC32K_CK
EAR_L_DET
VBAT
VOL_DN
SCP_VREQ_VAP
TRAY_DET
GND_SIM1
GND_SIM2
GND_MIC
GND_SIM1
GND_SIM2
GND_MIC
GND_VPA
GND_VDRAM1
GND_VGPU
GND_VCORE11
GND_VCORE12
GND_VMODEM
GND_VCORE
GND_VS1
GND_VS2
GND_VS2
GND_VS1
GND_VS2
GND_VS1
GND_VS2
GND_VS1

SAMSUNG CONFIDENTIAL
THIS DOCUMENT CONTAINS CONFIDENTIAL
PROPRIETARY INFORMATION THAT IS
SAMSUNG ELECTRONICS CO'S PROPERTY.
DO NOT DISCLOSE TO OR DUPLICATE FOR OTHERS
EXCEPT AS AUTHORIZED BY SAMSUNG.

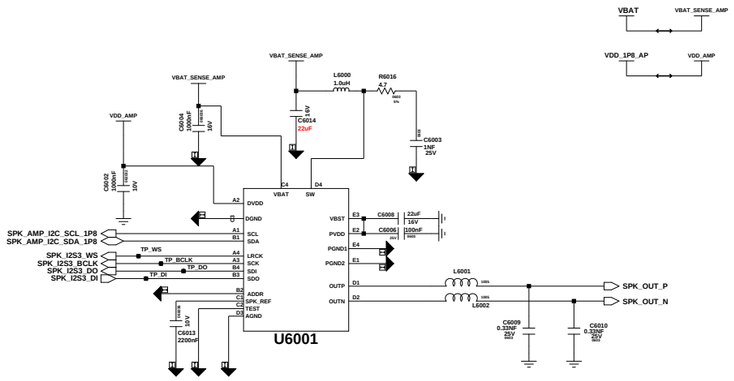

SPK AMP

Silicon Mitus

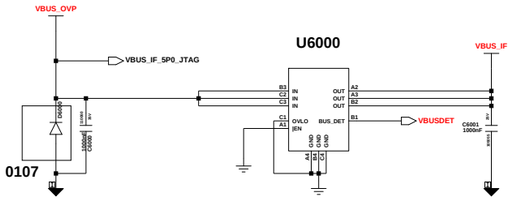

OVP (ETEK)

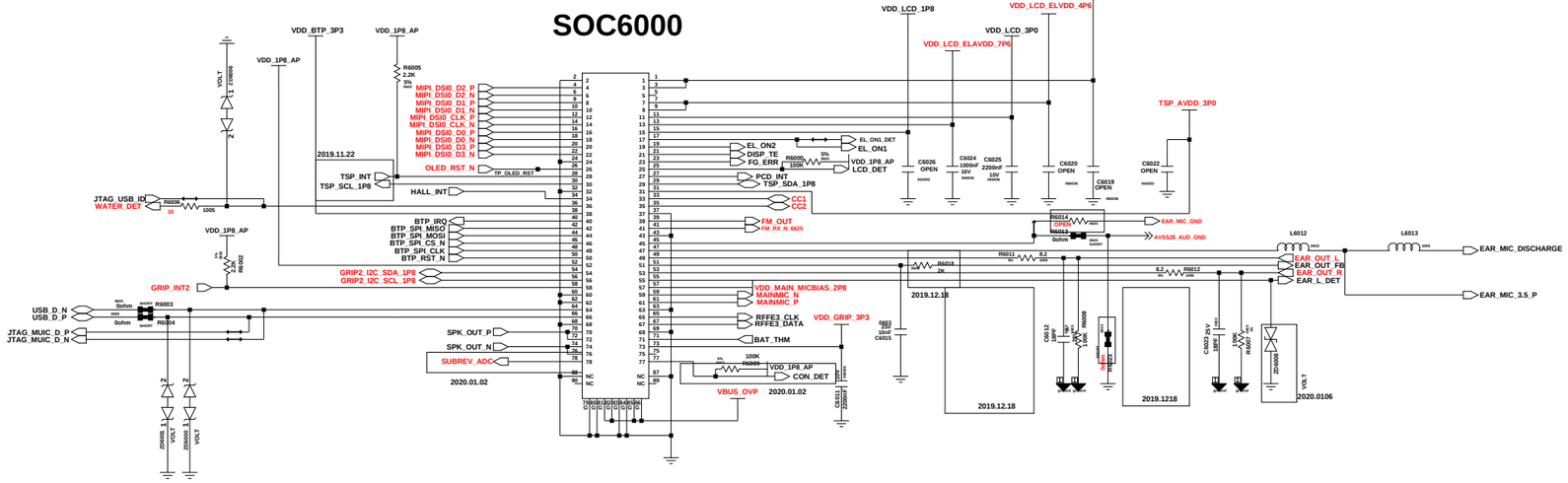

MAIN FPCB(78PIN)

DISPLAY(6.38" FHD+) & SUB PBA

AUDIO

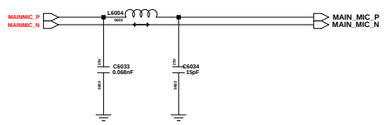

MAIN MIC

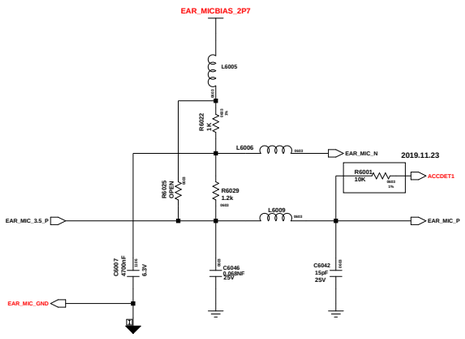

EAR MIC

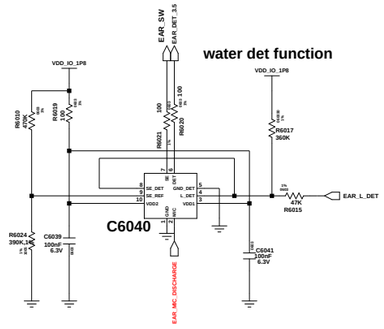

EAR detection IC

2019.12.18

EAR SW delete

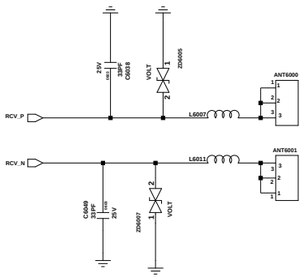

RCV CONTACT

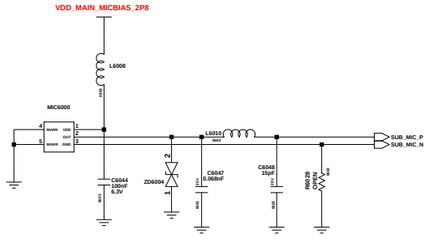

Sub MIC SANICO

Engineer:	
Drawn by:	AUDIO, SIM/SD, SHIELD CAN
R&D CHK:	TITLE: SM-A315F
DOC CTRL CHK:	Size: A1
MFG ENGR CHK:	
QA CHK:	REV: Drawing Number: Page:6/7

Changed by: | Date Changed: | Time Changed:

SAMSUNG CONFIDENTIAL
THIS DOCUMENT CONTAINS CONFIDENTIAL
PROPRIETARY INFORMATION THAT IS
SAMSUNG ELECTRONICS CO'S PROPERTY.
DO NOT DISCLOSE TO OR DUPLICATE FOR OTHERS
EXCEPT AS AUTHORIZED BY SAMSUNG.

CAMERA_PART

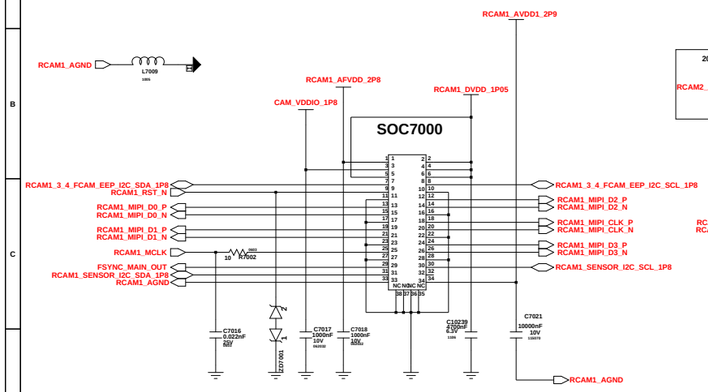

RCAM1_48M(34PIN)

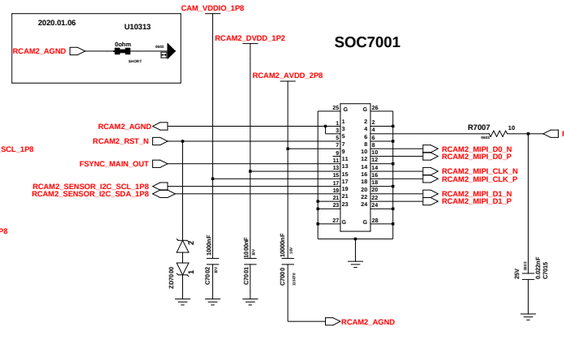

RCAM2_5M (24PIN)

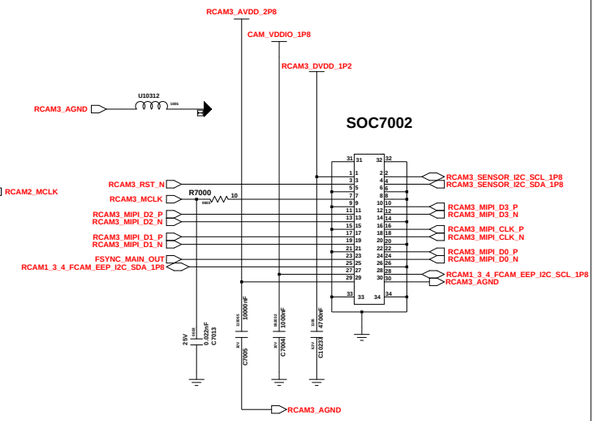

RCAM3_SUPER WIDE_8M(30pin)

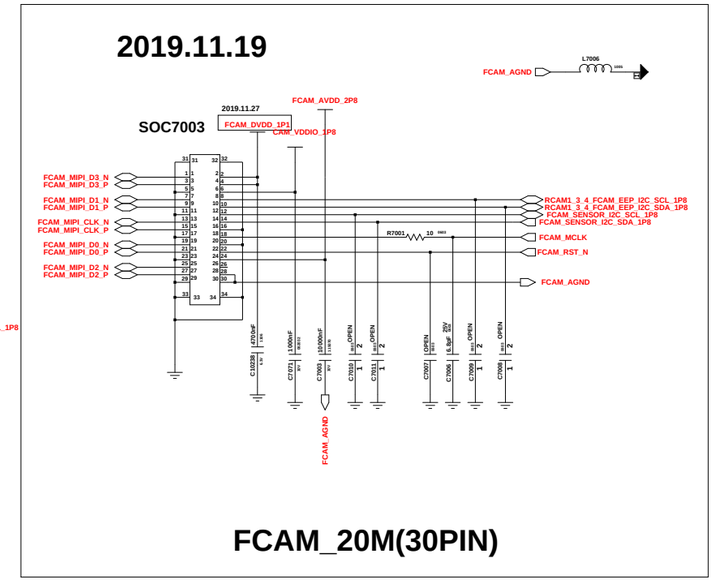

FCAM_20M(30PIN)

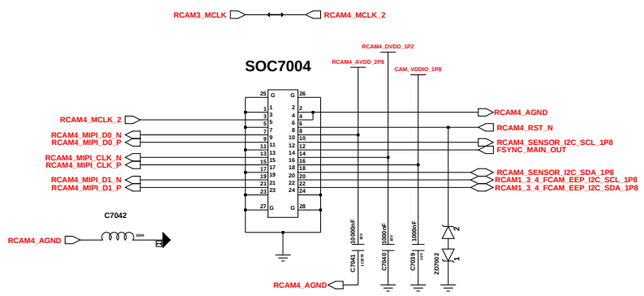

RCAM4_5M Macro(24PIN)

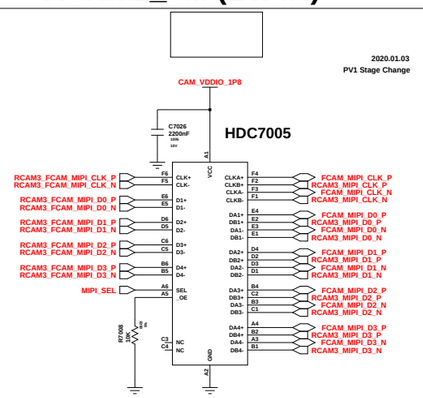

MIPI SW (RCAM3 & FCAM)

Diodes (2.44 x 2.44)

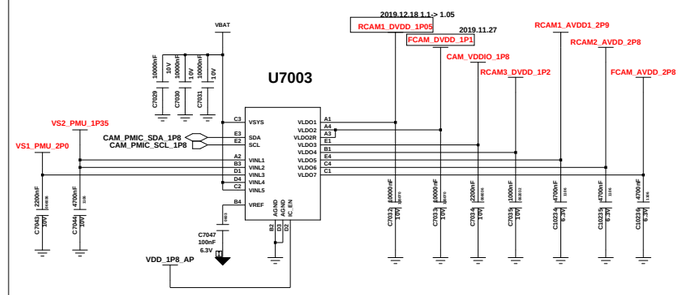

CAM PMIC

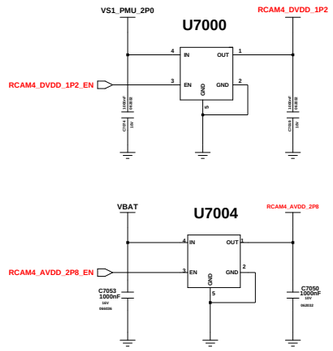

RCAM4 LDO

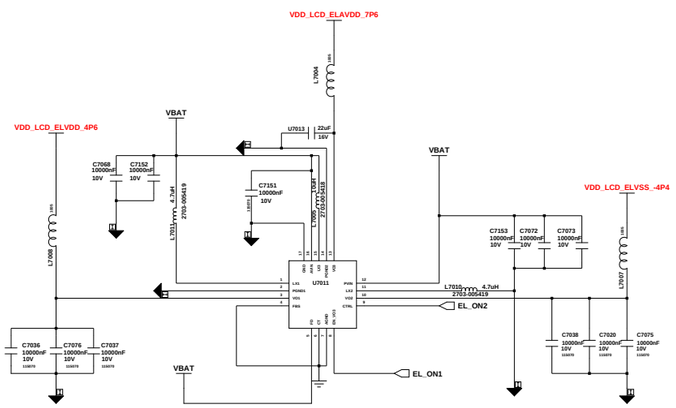

OCTA DCDC

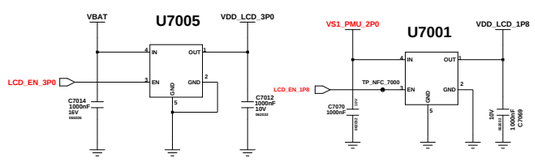

OCTA LDO

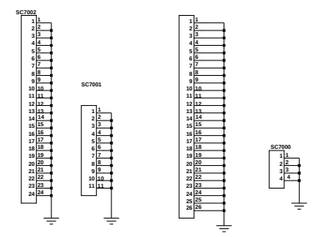

8/128 ALL SHOT

REGION		MEMORY		TOP
R7003 0ohm	G(SEA,LA)	R7006 0ohm	4/64	R7011 0ohm
R7009 0ohm	F(CIS,MEA,SWA)	R7010 0ohm	4/128	R7012 0ohm
R7005 0ohm	N(KOREA)	R7004 0ohm	6/128	R7013 0ohm
R7014 0ohm	NFC_X (Short = Not use)	R7015 0ohm	6/64	U10314 0ohm

SHIELD CAN

BOSS HOLE

BH7000

2D BARCODE

CN7000 CN7001

Engineer:	CAMERA, DISPLAY		
Drawn by:			
R&D CHK:	TITLE: SM-A315F	Size: A1	
DOC CTRL CHK:			
MFG ENGR CHK:			
Changed by:	Date Changed:	Time Changed:	QA CHK:
REV	Drawing Number:	Page: 2/2	

SM-A315G_SEA

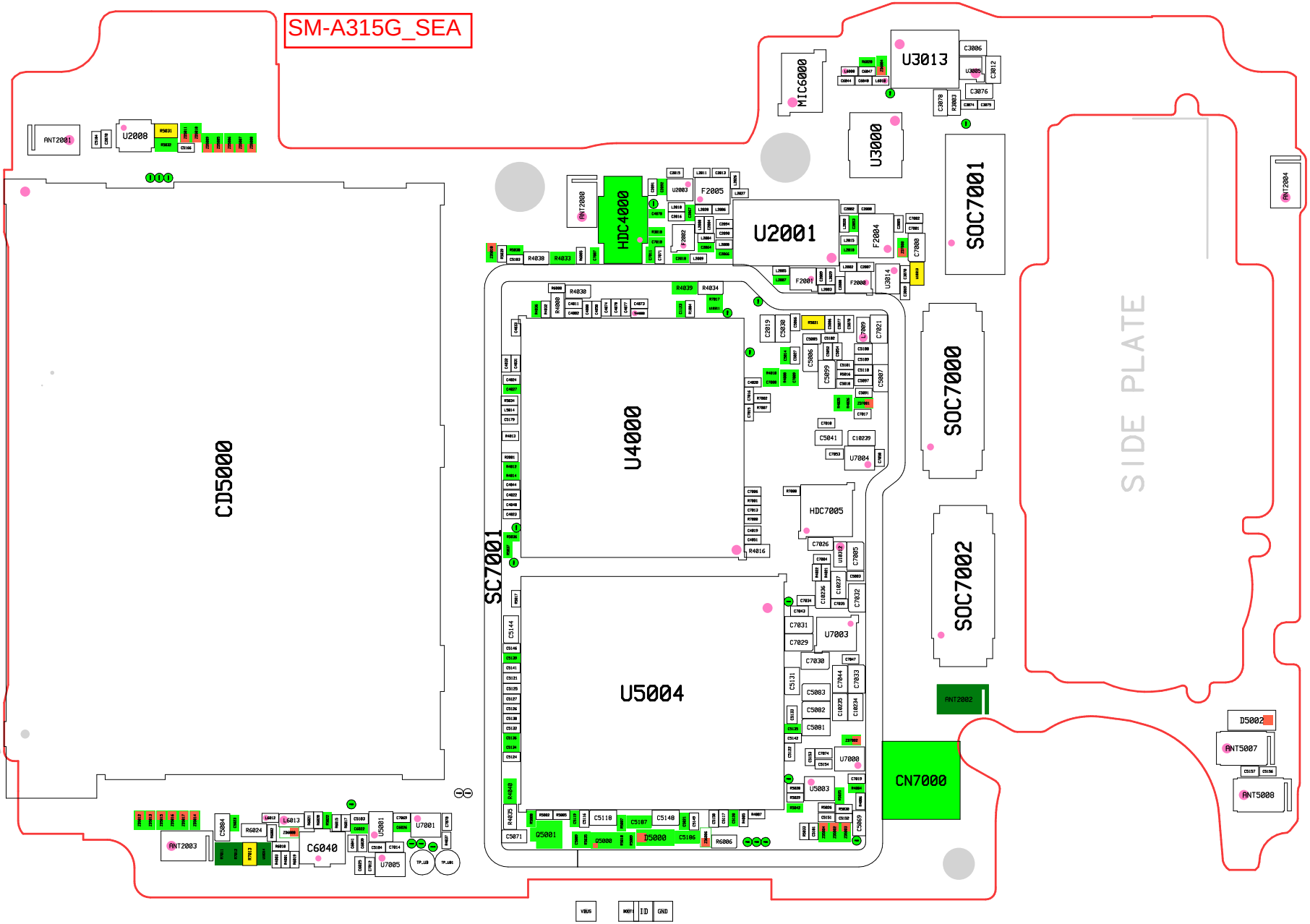
MIC6000
U3013
U3000
SOC7001
SIDE PLATE
ANT2001
U2008
ANT2000
HDC4000
U2001
F2005
F2004
F2001
F2008
U3014
ANT2004
CD5000
U4000
SOC7000
SC7001
HDC7005
U7004
U7003
SOC7002
U5004
ANT2002
CN7000
D5002
ANT5007
ANT5008
ANT2003
C6040
U5001
U7001
U7005
Q5001
D5000
U5003
U7008
VBUS
ID
GND

SM-A315G_SEA

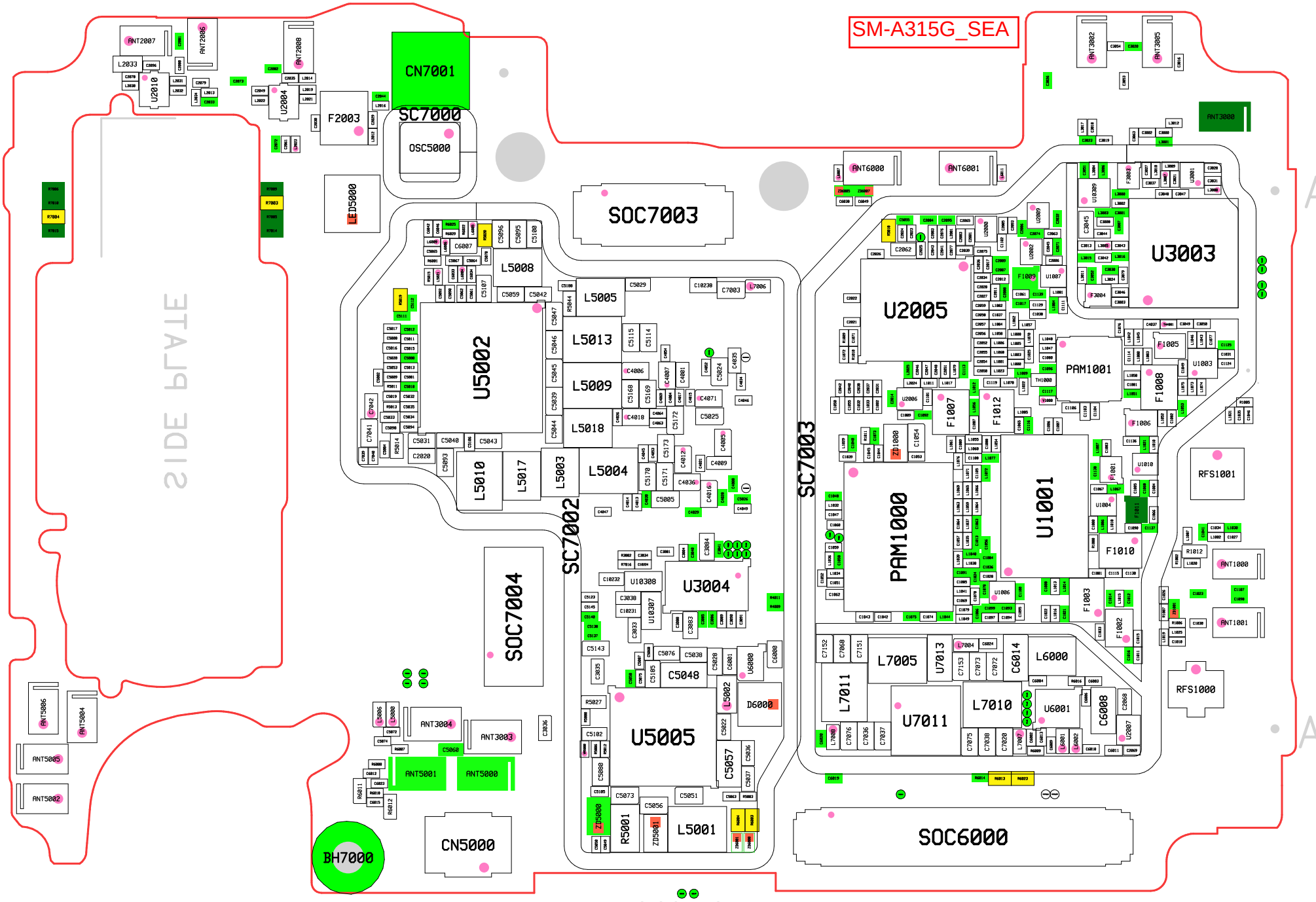
CN7001
SC7000
OSC5000
LED5000
SOC7003
SC7002
SC7003
SOC7004
U5002
L5008
L5005
L5013
L5009
L5018
L5010
L5017
L5003
L5004
U3004
U5005
L5001
R5001
ZD5001
ZD5000
D6000
L5002
C5048
C5057
CN5000
BH7000
ANT3004
ANT3003
ANT5001
ANT5000
ANT5006
ANT5004
ANT5005
ANT5002
ANT2007
ANT2006
ANT2008
U2010
U2004
F2003
ANT6000
ANT6001
U2005
PAM1000
U1001
U3003
PAM1001
F1008
F1005
U1003
F1006
F1001
U1004
F1011
F1010
F1003
F1002
U1006
RFS1001
RFS1000
ANT1000
ANT1001
ANT3000
ANT3002
ANT3005
L7005
U7013
L6000
L7011
U7011
L7010
U6001
C6008
C6014
SOC6000
SIDE PLATE

SM-A315G_LA

SAMSUNG CONFIDENTIAL
THIS DOCUMENT CONTAINS CONFIDENTIAL PROPRIETARY INFORMATION THAT IS SAMSUNG ELECTRONICS CO'S PROPERTY. DO NOT DISCLOSE TO OR DUPLICATE FOR OTHERS EXCEPT AS AUTHORIZED BY SAMSUNG.

	CIS/SWA/MEA	LATIN/SEA	KOR
FDD	1/ 2/ 3/ 5/ 7/ 8/ 20	1/2/3/4/5/7/8/12/13/17/20/28/66	1/ 3/ 5/ 7/ 8/ 17/ 20/ 28
TDD	38/ 40/ 41	38/ 40/ 41	38/ 40/ 41
3G	1/ 2/ 5/ 8	1/2/4/5/8	1/ 2/ 5/ 8
2G	850/900/1800/1900	850/900/1800/1900	850/900/1800/1900

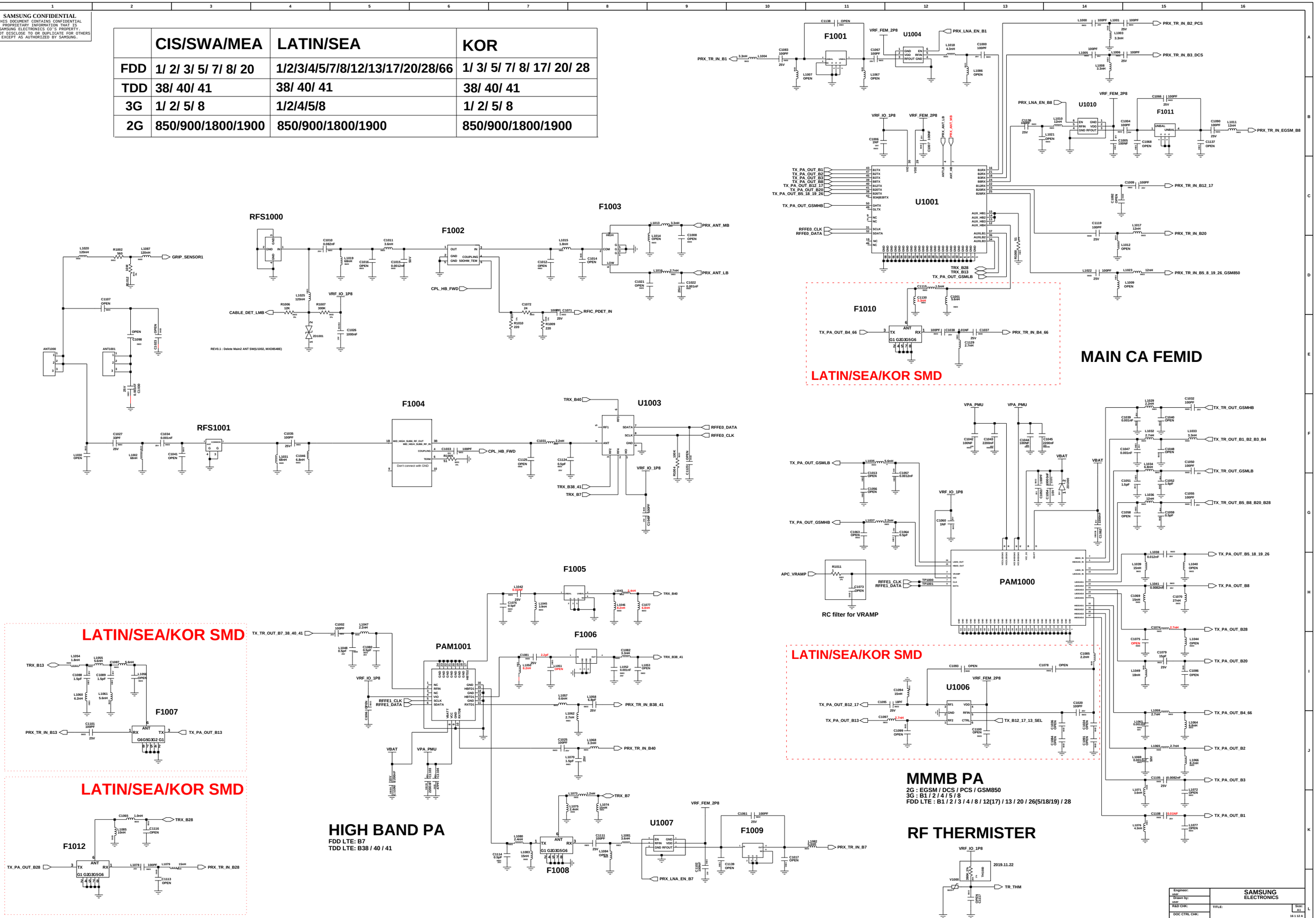

SAMSUNG CONFIDENTIAL
THIS DOCUMENT CONTAINS CONFIDENTIAL PROPRIETARY INFORMATION THAT IS SAMSUNG ELECTRONICS CO'S PROPERTY. DO NOT DISCLOSE TO OR DUPLICATE FOR OTHERS EXCEPT AS AUTHORIZED BY SAMSUNG.

	CIS/SWA/MEA	LATIN/SEA	KOR
FDD	1/ 2/ 3/ 5/ 7/ 8/ 20	1/2/3/4/5/7/8/12/13/17/20/28/66	1/ 3/ 5/ 7/ 8/ 17/ 20/ 28
TDD	38/ 40/ 41	38/ 40/ 41	38/ 40/ 41
3G	1/ 2/ 5/ 8	1/2/4/5/8	1/ 2/ 5/ 8
2G	850/900/1800/1900	850/900/1800/1900	850/900/1800/1900

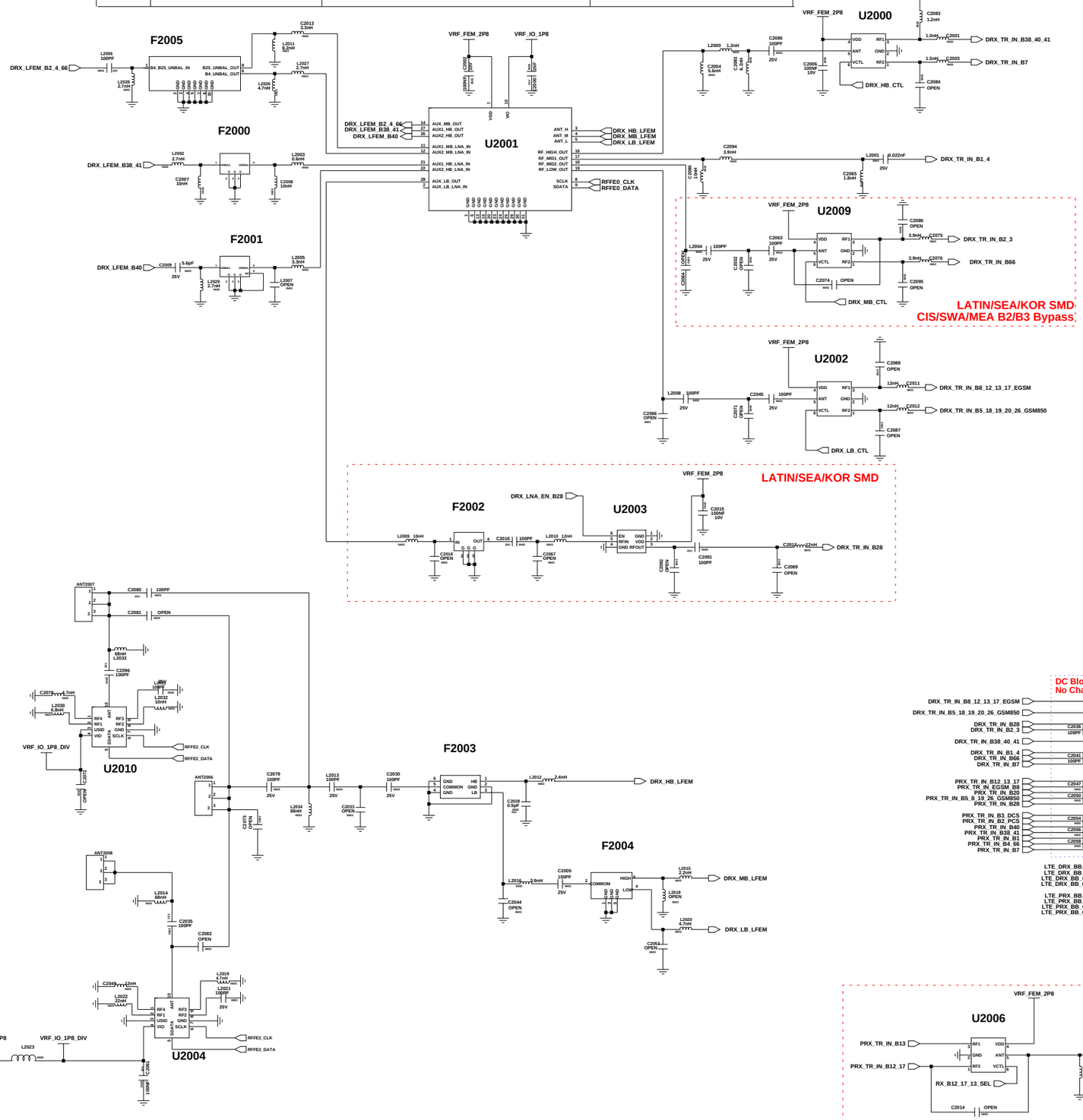

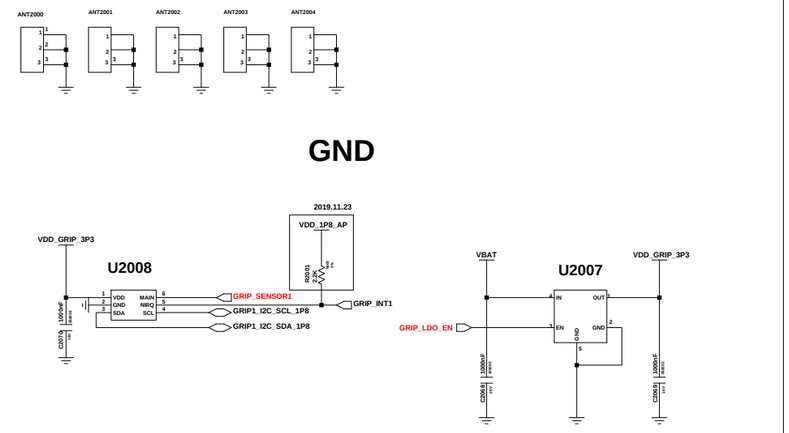

GRIP SENSOR1(HB)

TRANCEIVER

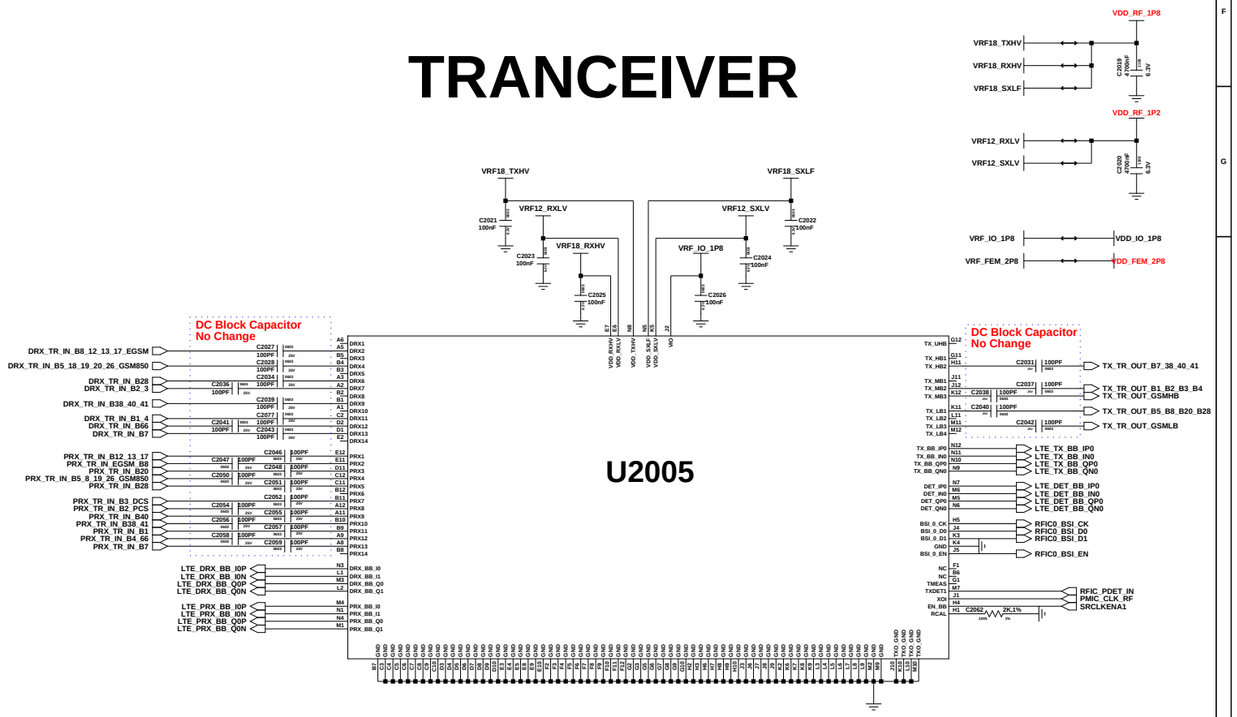

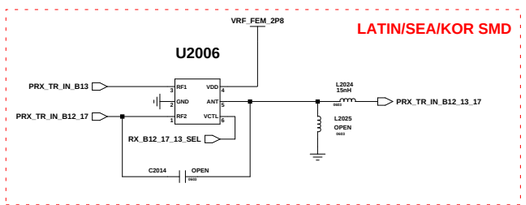

Engineer	DRX, TRANCEIVER
Drawn by:	
R&D CHK:	TITLE:
DOC CTRL CHK:	SM-A315F
MFG ENGR CHK:	
QA CHK:	Size: A3
Changed by: / Date Changed: / Time Changed:	Drawing Number: 2/7

SAMSUNG CONFIDENTIAL
THIS DOCUMENT CONTAINS CONFIDENTIAL
PROPRIETARY INFORMATION THAT IS
SAMSUNG ELECTRONICS CO'S PROPERTY.
DO NOT DISCLOSE TO OR DUPLICATE FOR OTHERS
EXCEPT AS AUTHORIZED BY SAMSUNG.

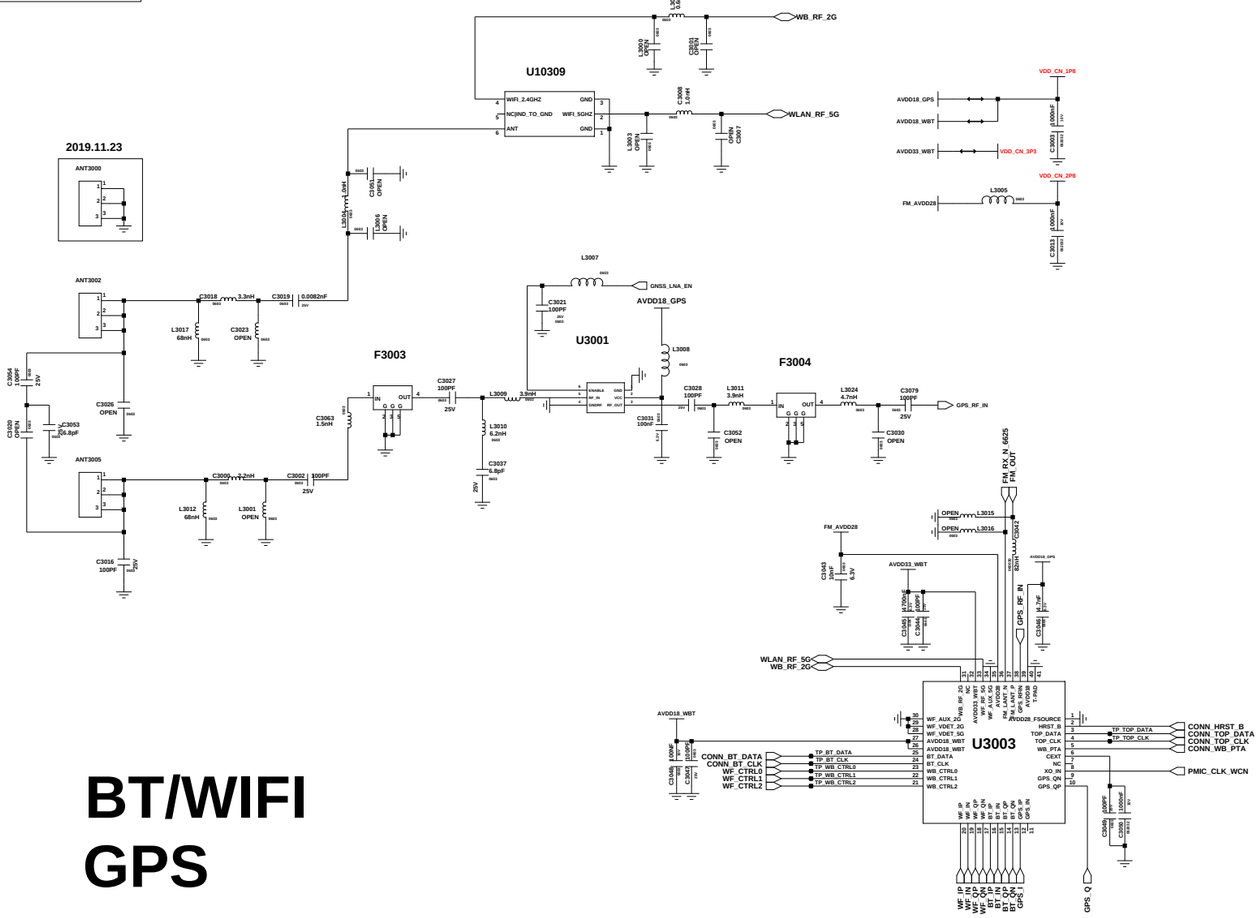

BT/WIFI GPS

NFC

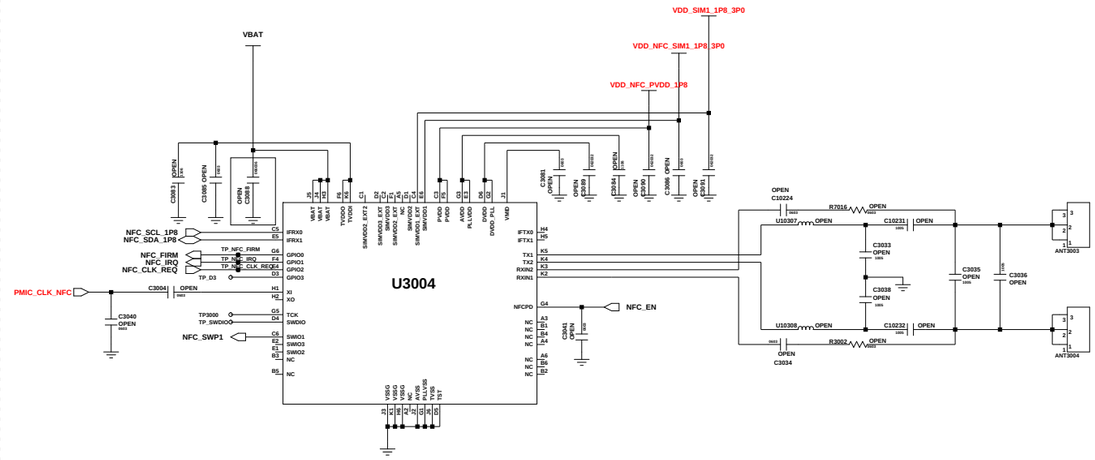

NFC	NFC PART	Power supply of SIM1		NFC_CHECK:GPIO52 (BPI_BUS15_ANT2)	
	U3004	R5031	R5032	R4032	R4036
NFC	CONNECT	short	open	10K ohm	open
nonNFC	NC	open	short	open	10K ohm

SENSORS

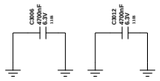

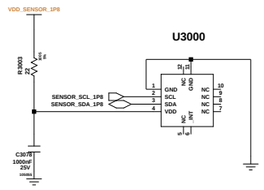

ALS Sensor

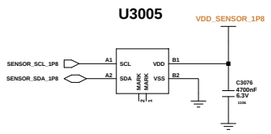

MAGNETIC

YAMAHA (0.97x0.97)

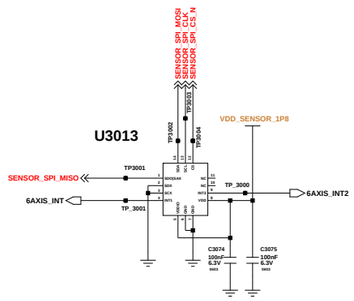

6 AXIS(ACC+GRYO)

STM(3x2.5)

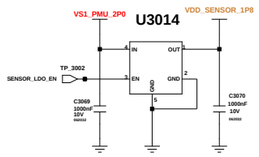

SENSOR LDO

Engineer:	SENSOR, WIFI/BT/GPS/NFC
Drawn by:	
R&D CHK:	TITLE: SM-A315F
DCC CTRL CHK:	Size: A1
MFG ENGR CHK:	
Changed by: user93 / Date Changed: / Time Changed: / QA CHK:	REV: / Drawing Number: / Page: 97

SAMSUNG CONFIDENTIAL
THIS DOCUMENT CONTAINS CONFIDENTIAL
AND PROPRIETARY INFORMATION OF
SAMSUNG ELECTRONICS CO'S PROPERTY.
DO NOT DISCLOSE TO OR DUPLICATE FOR OTHERS
EXCEPT AS AUTHORIZED BY SAMSUNG.

AP_(MTK_MT6768_11*11.8)

U4000-1

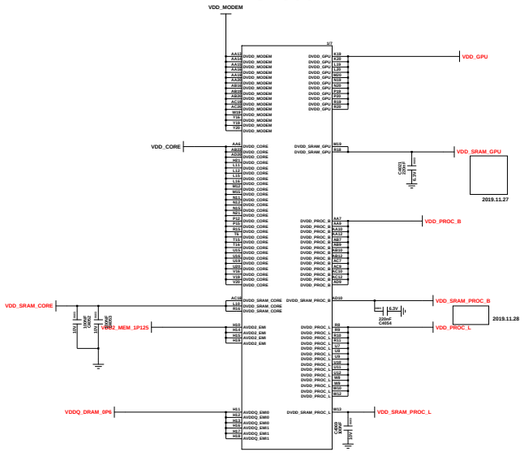

(1/7)

U4000-2

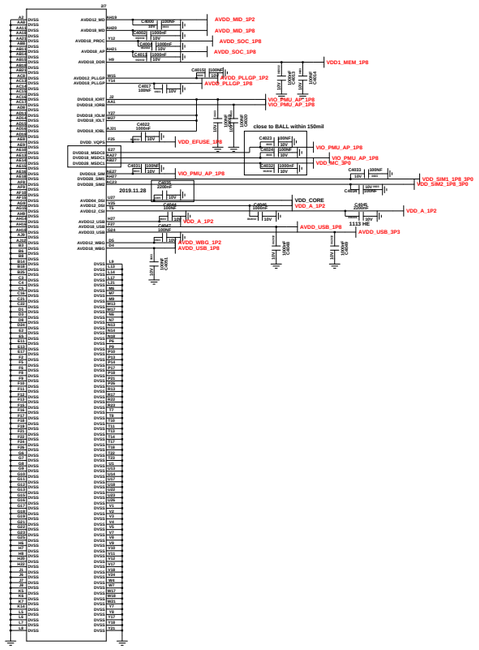

U4000-3

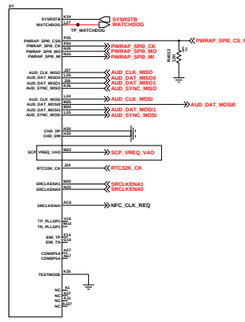

U4000-4

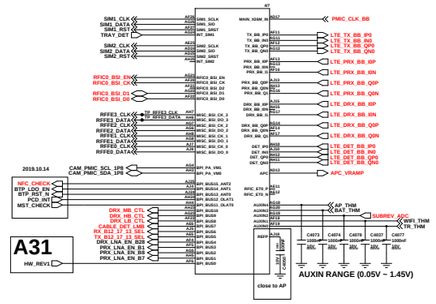

U4000-5

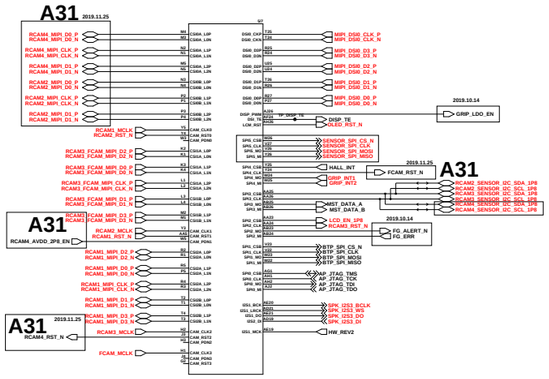

U4000-6

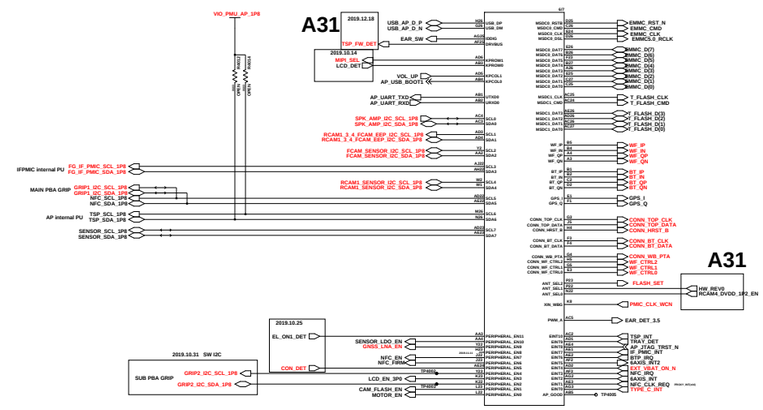

U4000-7

I2C Pull-up Register

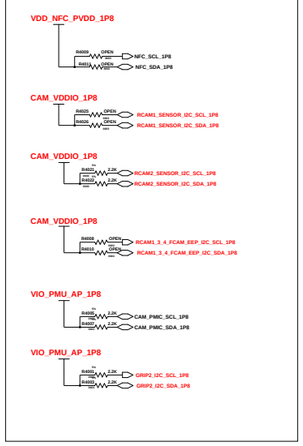

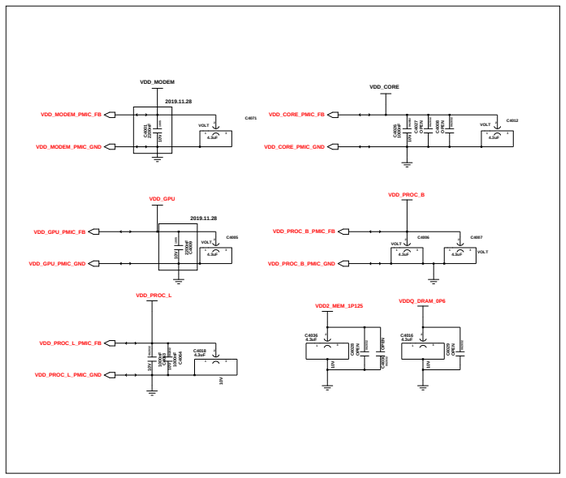

Thermister

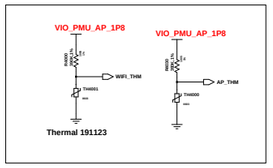

TSP FIRMWARE

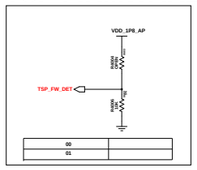

00	
01	

Not used in A31
(used in A41)

MST OPTION

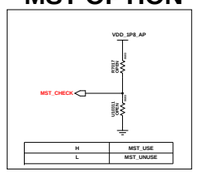

H	MST_USE
L	MST_UNUSE

NFC OPTION

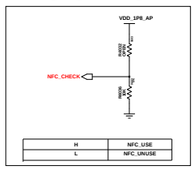

H	NFC_USE
L	NFC_UNUSE

H/W Revision Setting

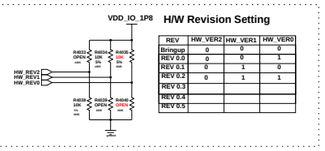

REV	HW_VER2	HW_VER1	HW_VER0
Bringup	0	0	0
REV 0.0	0	0	1
REV 0.1	0	1	0
REV 0.2	0	1	1
REV 0.3			
REV 0.4			
REV 0.5			

PCB JTAG

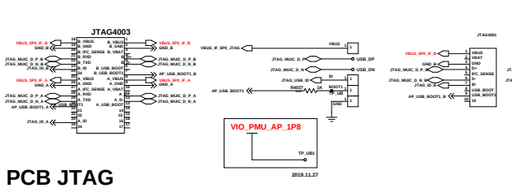

AP JTAG

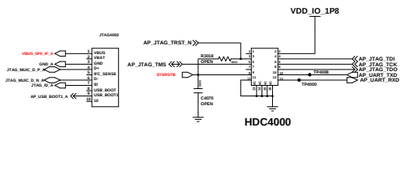

Engineer:							
Drawn by:							
R&D CHK:							
DOC CTRL CHK:							
MFG ENGR CHK:							

AP

SM-A315F

Size: A0

Changed by:	Date Changed:	Time Changed:	QA CHK:	REV:	Drawing Number:	Page:

SAMSUNG CONFIDENTIAL
THIS DOCUMENT CONTAINS CONFIDENTIAL PROPRIETARY INFORMATION THAT IS SAMSUNG ELECTRONICS CO'S PROPERTY DO NOT DISCLOSE TO OR DUPLICATE FOR OTHERS EXCEPT AS AUTHORIZED BY SAMSUNG

MAIN_PMIC(MTK_MT6358_6.4x6)

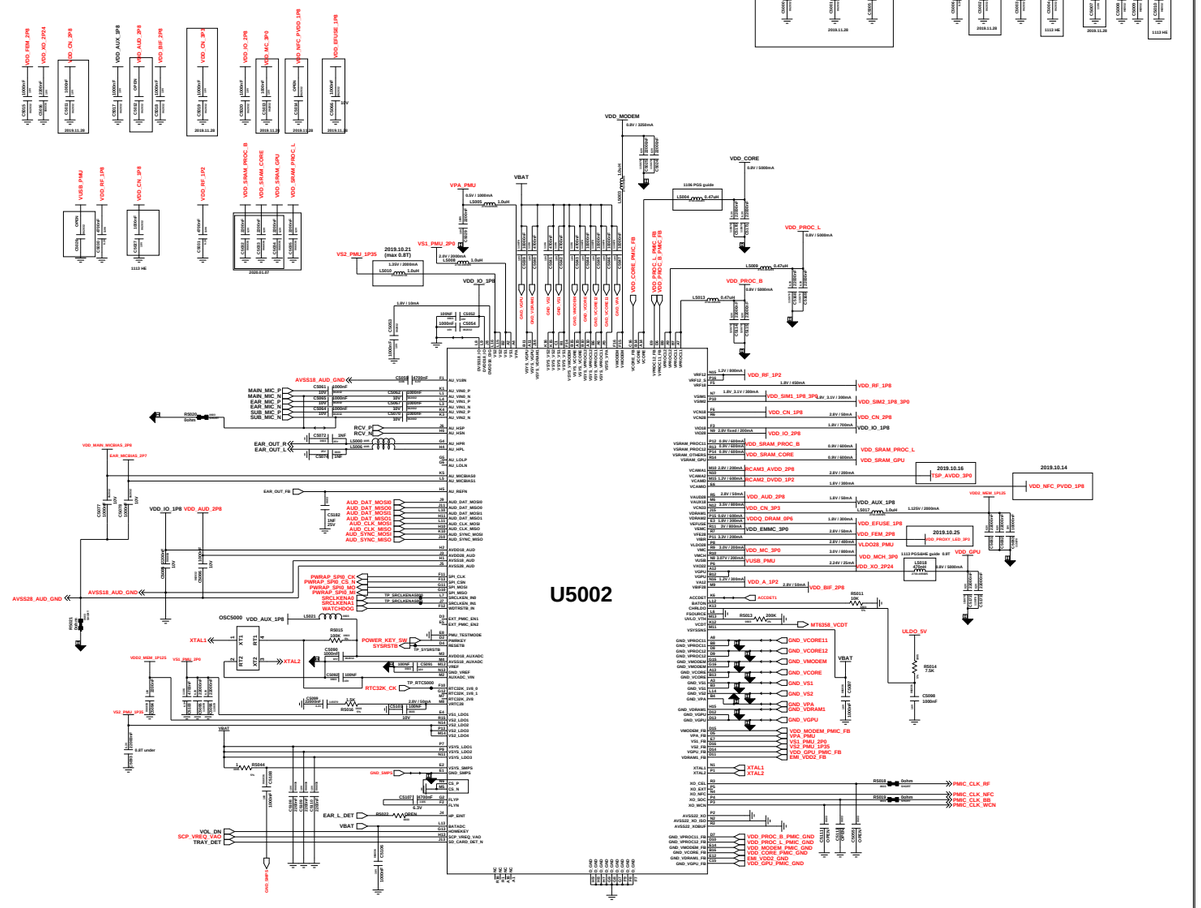

IF_PMIC(S.LSI_S2MU106X01_5.2x4.8)

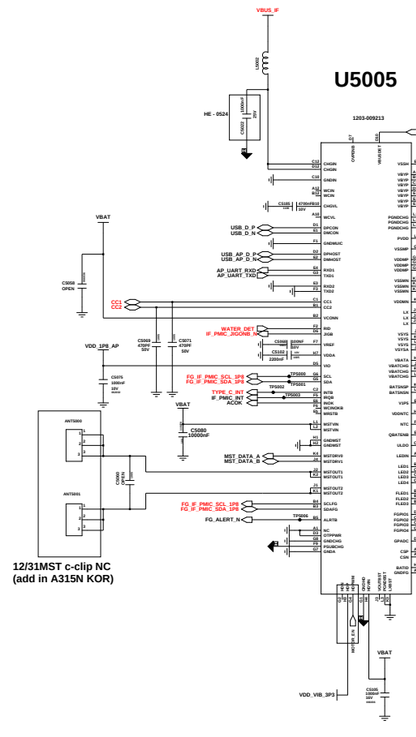

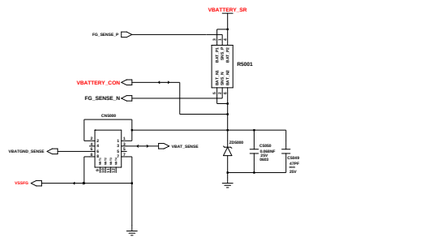

BATTERY CON

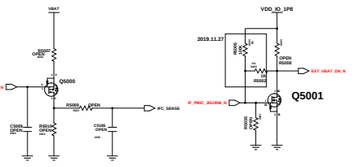

PMIC VCDT

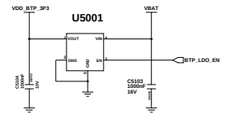

FPS PWR

SIM & SD CARD (3IN3)

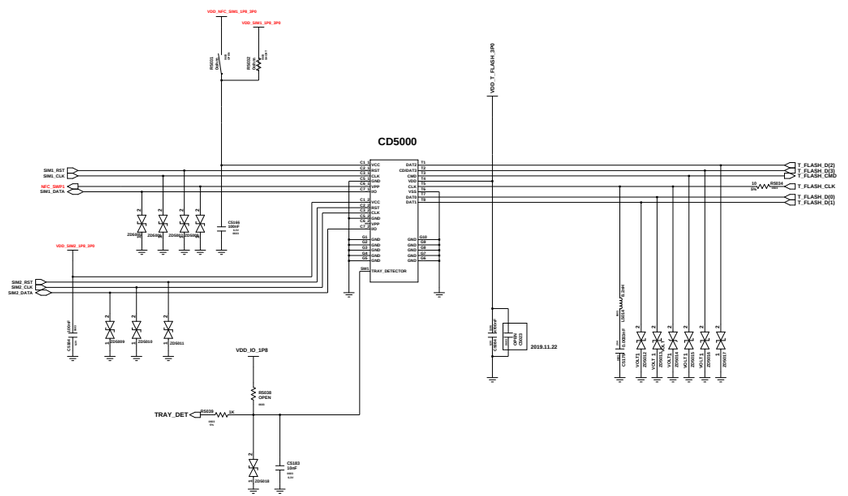

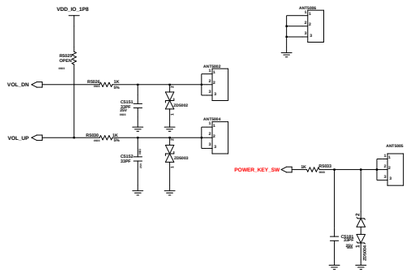

VOLUME KEY

POWER KEY

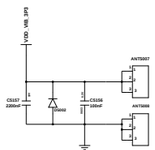

MOTOR

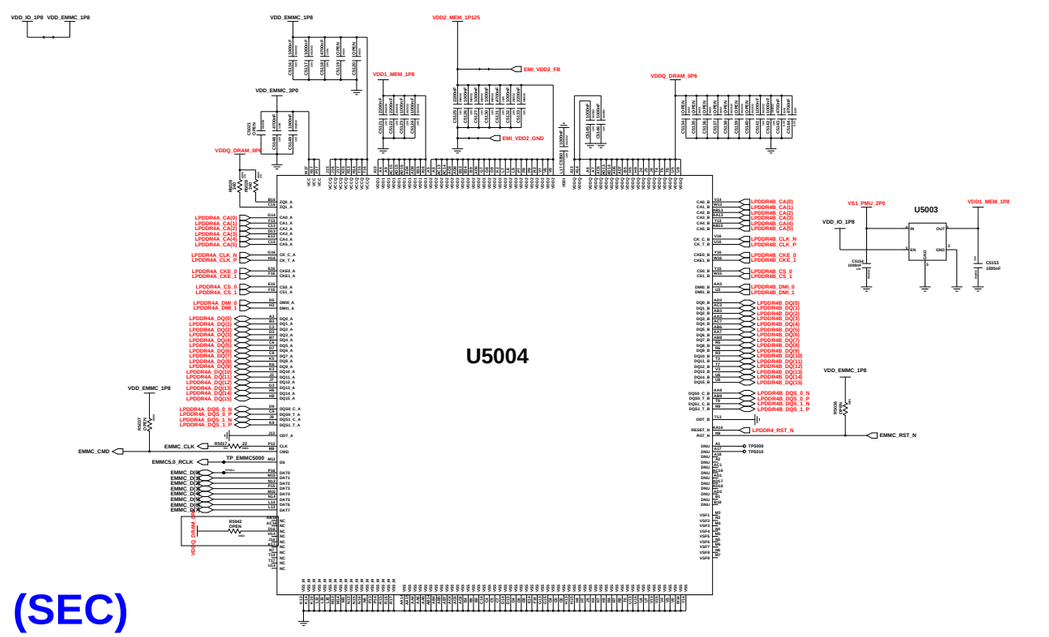

(SEC)

eMCP 4G LPDDR & 64GB eMMC 5.1

Engineer:	PMIC/IF PMIC/eMMC
Drawn by:	
R&D CHK:	TITLE: SM-A315F
DOC CTRL CHK:	
MFG ENGR CHK:	
QA CHK:	REV: Drawing Number: Page:p1

Changed by: | Date Changed: | Time Changed:

SAMSUNG CONFIDENTIAL
THIS DOCUMENT CONTAINS CONFIDENTIAL
PROPRIETARY INFORMATION THAT IS
SAMSUNG ELECTRONICS CO'S PROPERTY.
DO NOT DISCLOSE TO OR DUPLICATE FOR OTHERS
EXCEPT AS AUTHORIZED BY SAMSUNG.

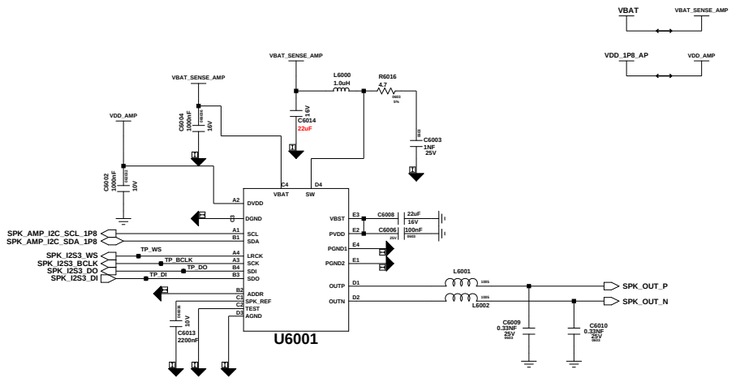

SPK AMP

Silicon Mitus

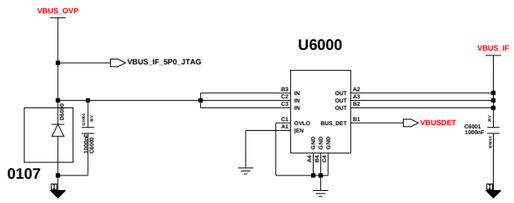

OVP (ETEK)

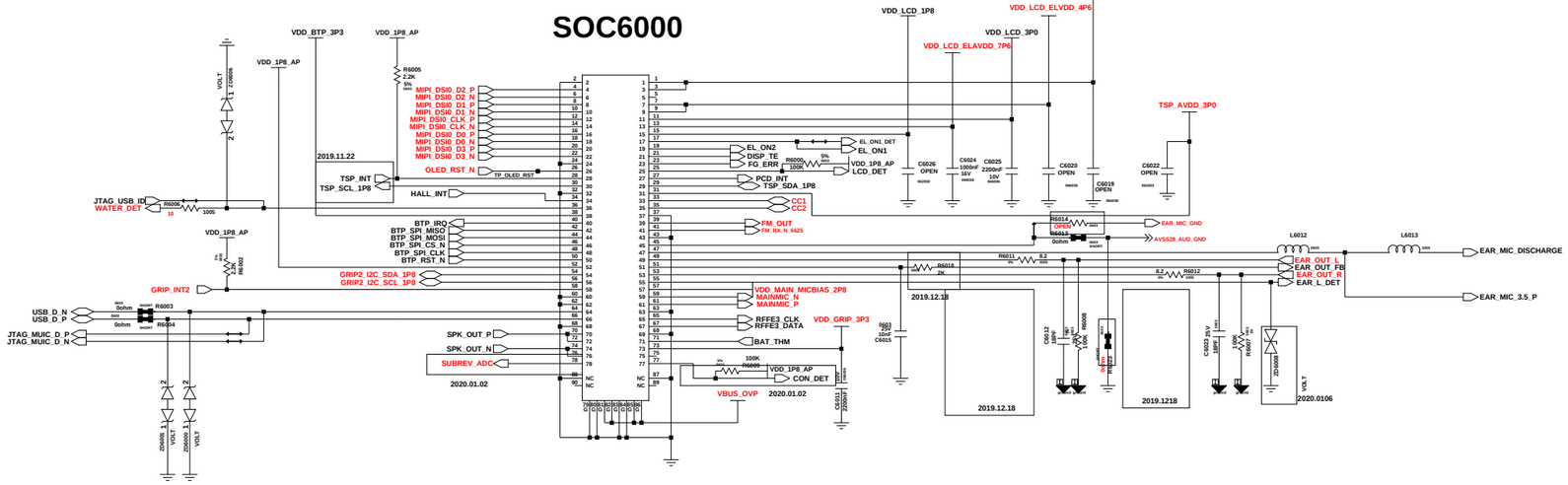

MAIN FPCB(78PIN)

DISPLAY(6.38" FHD+) & SUB PBA

AUDIO

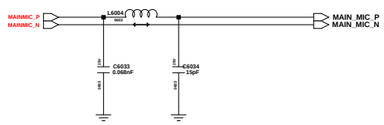

MAIN MIC

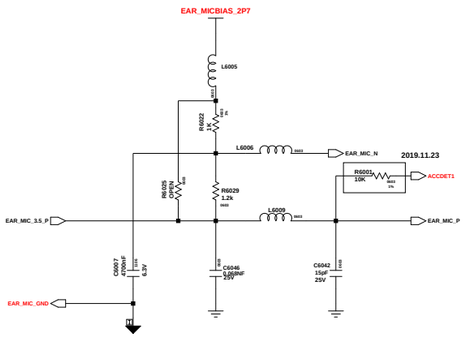

EAR MIC

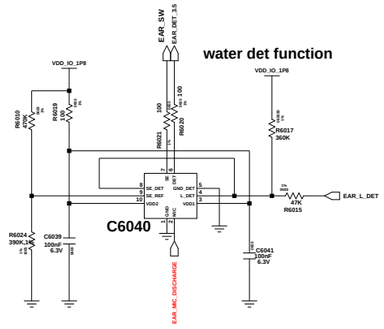

EAR detection IC

2019.12.18

EAR SW delete

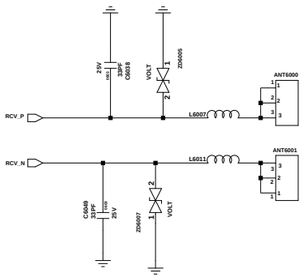

RCV CONTACT

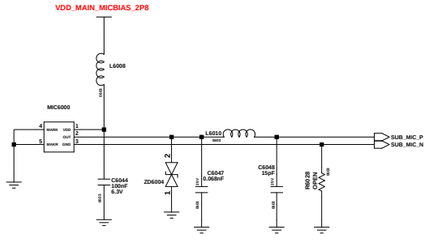

Sub MIC SANICO

Engineer:		AUDIO, SIM/SD, SHIELD CAN	
Drawn by:			
R&D CHK:		TITLE:	Size: A1
DOC CTRL CHK:		SM-A315F	
MFG ENGR CHK:			
Changed by: / Date Changed:	Time Changed: / QA CHK:	REV / Drawing Number:	Page:6/7

SAMSUNG CONFIDENTIAL
THIS DOCUMENT CONTAINS CONFIDENTIAL PROPRIETARY INFORMATION THAT IS SAMSUNG ELECTRONICS CO'S PROPERTY. DO NOT DISCLOSE TO OR DUPLICATE FOR OTHERS EXCEPT AS AUTHORIZED BY SAMSUNG.

CAMERA_PART

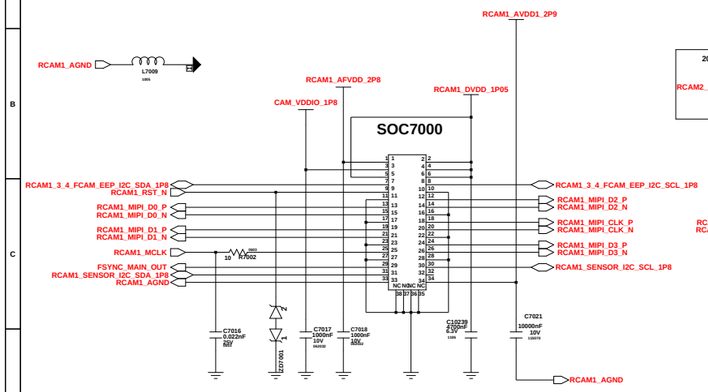

RCAM1_48M(34PIN)

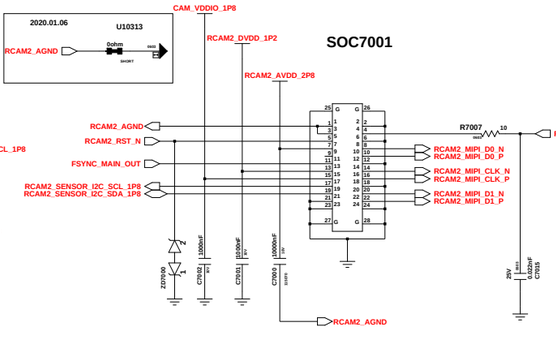

RCAM2_5M (24PIN)

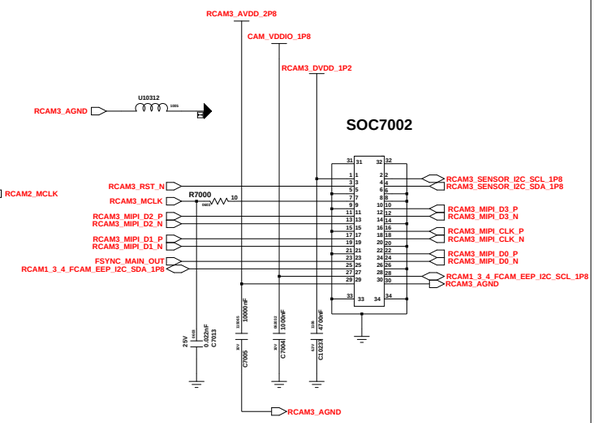

RCAM3_SUPER WIDE_8M(30pin)

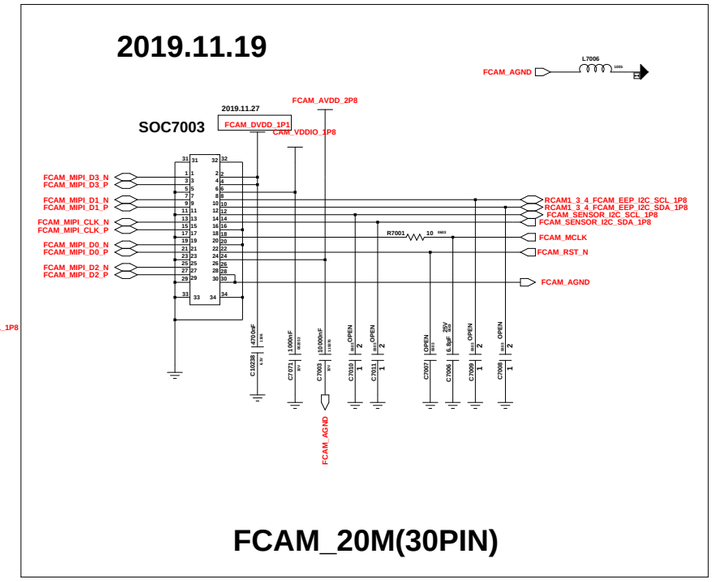

FCAM_20M(30PIN)

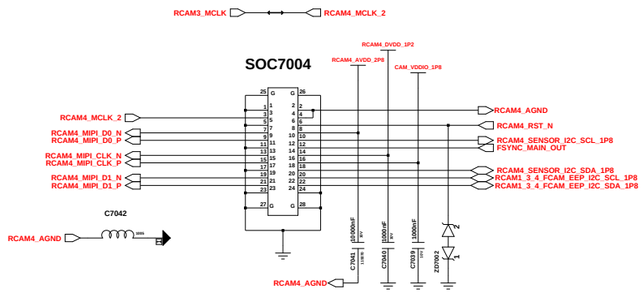

RCAM4_5M Macro(24PIN)

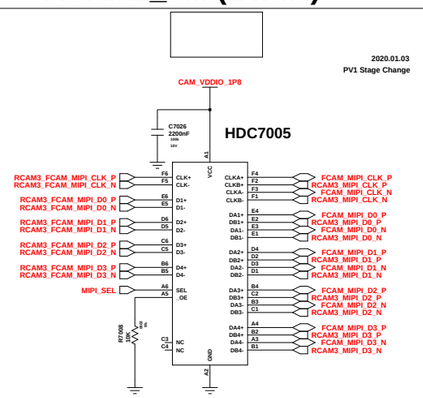

MIPI SW (RCAM3 & FCAM)

Diodes (2.44 x 2.44)

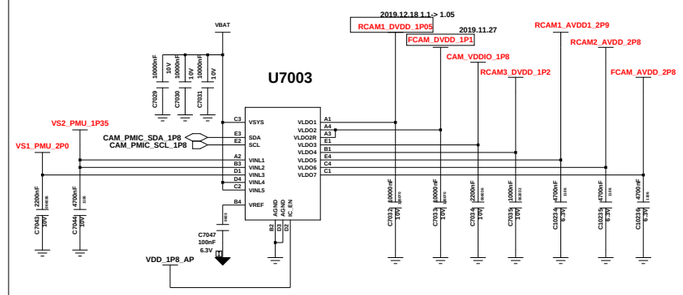

CAM PMIC

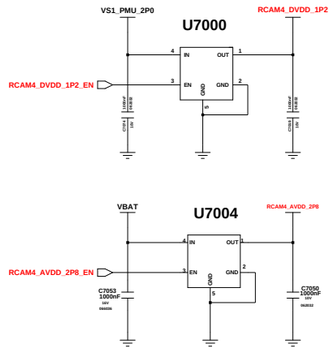

RCAM4 LDO

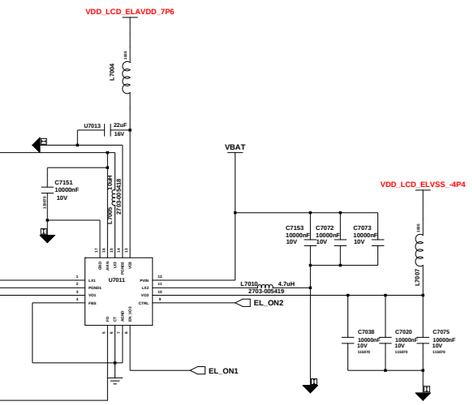

OCTA DCDC

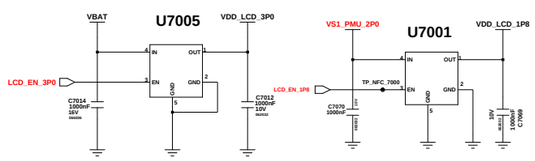

OCTA LDO

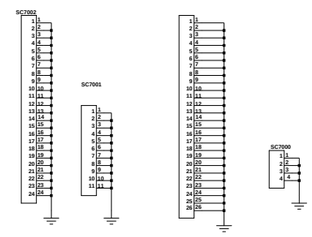

8/128 ALL SHOT

REGION		MEMORY		TOP
R7003 0ohm	G(SEA,LA)	R7006 0ohm	4/64	R7011 0ohm
R7009 0ohm	F(CIS,MEA,SWA)	R7010 0ohm	4/128	R7012 0ohm
R7005 0ohm	N(KOREA)	R7004 0ohm	6/128	R7013 0ohm
R7014 0ohm	NFC_X (Short = Not use)	R7015 0ohm	6/64	U10314 0ohm

SHIELD CAN

BOSS HOLE

BH7000

2D BARCODE

CN7000 CN7001

Engineer:	CAMERA, DISPLAY		
Drawn by:			
R&D CHK:	TITLE: SM-A315F	Size: A1	
DOC CTRL CHK:			
MFG ENGR CHK:			
Changed by:	Date Changed:	Time Changed:	QA CHK:
REV	Drawing Number:	Page: 2/2	

SM-A315G_LA

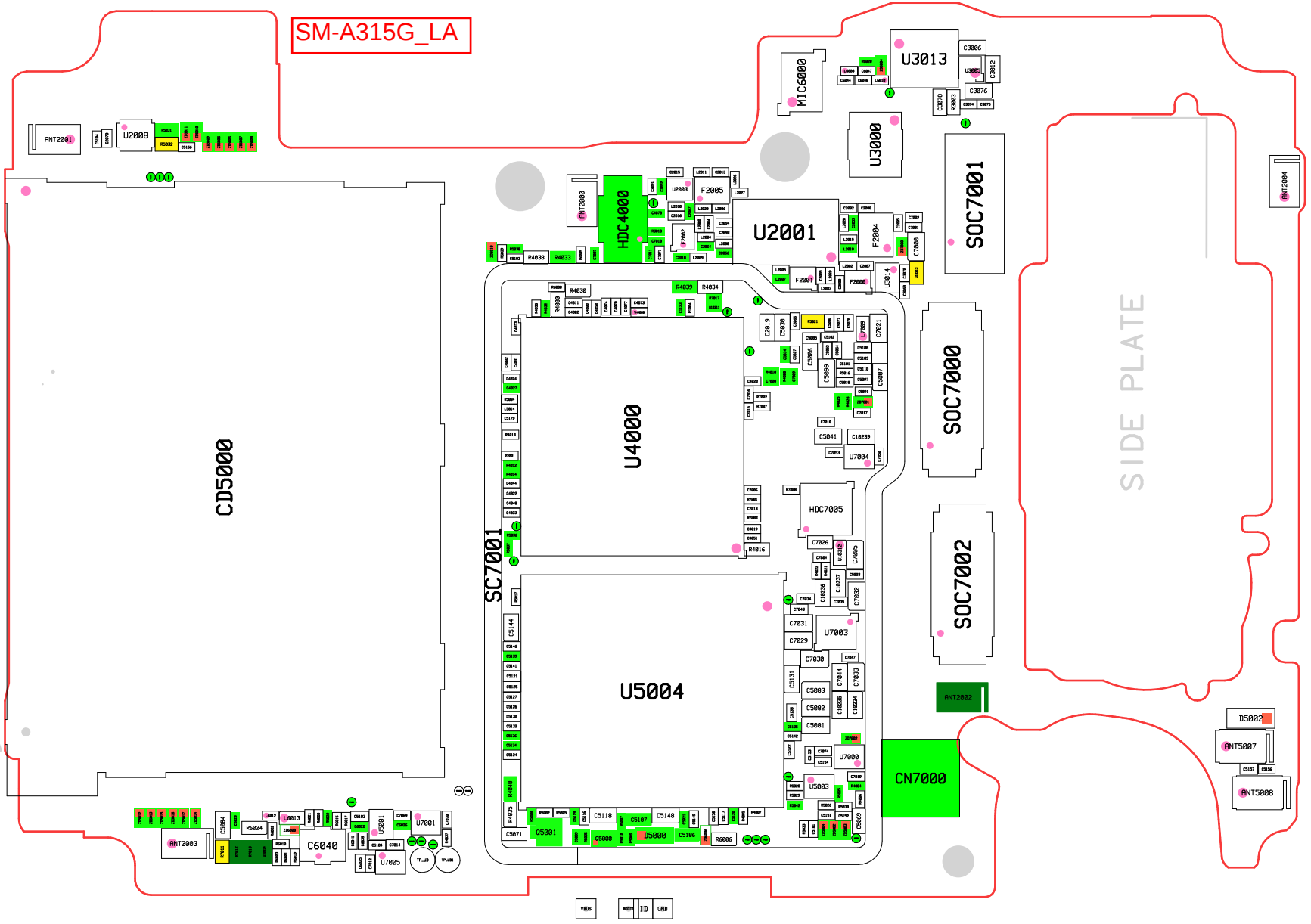
MIC6000
U3013
U3000
SOC7001
SOC7000
SOC7002
SIDE PLATE
ANT2001
U2008
ANT2000
HDC4000
U2001
ANT2004
CD5000
U4000
SC7001
HDC7005
U5004
U7003
U7004
U7000
U5003
ANT2002
CN7000
D5002
ANT5007
ANT5008
ANT2003
C6040
U7001
U7005
VBUS
ID
GND

SM-A315G_LA

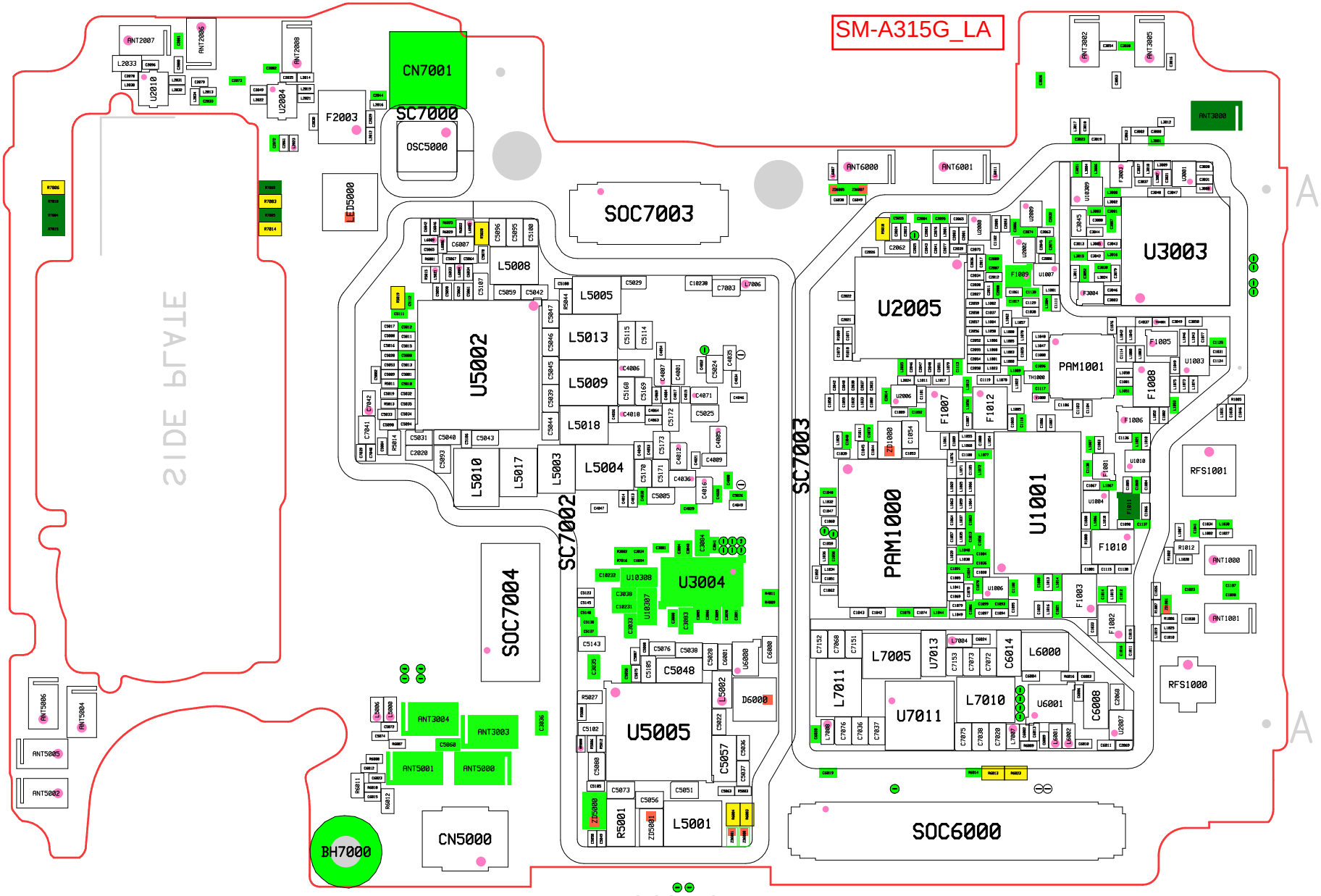
CN7001
SC7000
OSC5000
F2003
LED5000
SOC7003
U5002
L5008
L5005
L5013
L5009
L5018
L5010
L5017
L5003
L5004
SC7002
SOC7004
U3004
U5005
CN5000
BH7000
ANT3004
ANT3003
ANT5001
ANT5000
ANT2007
ANT2006
ANT2008
U2010
U2004
ANT5006
ANT5004
ANT5005
ANT5002
ANT6000
ANT6001
ANT3002
ANT3005
ANT3000
U2005
U3003
PAM1001
F1007
F1012
F1008
U1001
PAM1000
F1010
F1003
F1002
RFS1001
RFS1000
ANT1000
ANT1001
L7005
L7011
U7011
L7010
U6001
C6008
L6000
SOC6000
SC7003
SIDE PLATE
A
A